Operation & Installation Manual

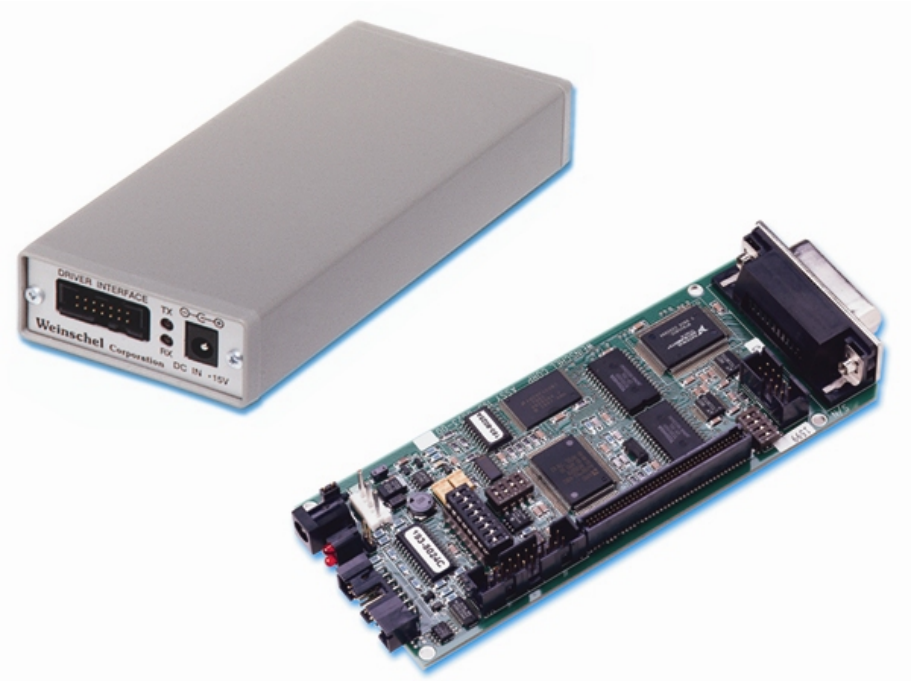

SmartStep® Programmable Attenuator/Switch Controller
(Models 8210A-1 & 8210A-2)

This documentation may not be reproduced in any form, for any purpose unless authorized in writing by Aeroflex / Weinschel, Inc..

AEROFLEX
WEINSCHEL

© Aeroflex / Weinschel, Inc.
Frederick, Maryland
1998, 2001, 2003

SAFETY SUMMARY

DEFINITIONS.

The following definitions apply to WARNINGS, CAUTIONS, and NOTES found throughout this manual.

WARNING

An operating or maintenance procedure, practice, statement, condition, etc., which, if not strictly observed, could result in injury and/or death of personnel. Do not proceed beyond a WARNING symbol until all the indicated conditions have been fully understood and/or met.

CAUTION

An operating or maintenance procedure, practice, statement, condition, etc., which, if not strictly observed, could result in damage or destruction of the equipment or long-term health hazards to personnel. Do not proceed beyond a CAUTION symbol until all the indicated conditions have been fully understood and/or met.

NOTE

An essential operating or maintenance procedure, condition, or statement that must be highlighted.

GENERAL PRECAUTIONS.

The following are general precautions that are not related to any specific procedure and, therefore, do not appear elsewhere in this publication. These are precautions that personnel must understand and apply during various phases of instrument operation or service.

WARNING

- Potentially lethal voltages are present in this instrument. Serious shock hazards from voltages above 70 volts may exist in any connector, chassis, or circuit board. Observe the following precautions:
- To minimize shock hazard, the instrument chassis must be connected to an electrical ground. Using the supplied three-conductor power cable ensures that the instrument can be firmly connected to the ac power source and electrical ground at a grounded power outlet. If using a 3-2 wire adapter be sure to connect the ground lead to earth ground.
- Use the buddy system any time work involving active high voltage components is required. Turn OFF the power before making/breaking any electrical connection. Regard any exposed connector, terminal board, or circuit board as a possible shock hazard. DO NOT replace any component or module with power applied.
- If test conditions to live equipment are required, ground the test equipment before probing the voltage or signal to be tested.
- Personnel working with or near high voltage should be familiar with modern methods of resuscitation.
- DO NOT wear jewelry (rings, bracelets, metal watches, and/or neck chains) while working on exposed equipment. Be very cautious about using hand tools near exposed backplanes, bus bars, and/or power supply terminals. Use properly insulated tools. When making test connections to the power supply terminals and bus bars, use only insulated probe tips.
- Verify that the instrument is set to match the available line voltage and the correct fuse is installed.
- DO NOT install substitute parts or perform any unauthorized modification to this instrument. Contact Weinschel Corporation to acquire any information on replacement parts or returning the instrument for repair. Unauthorized modification can cause injury to personnel and/or destruction of the instrument.
- Operating personnel must not remove instrument covers. Component replacement or adjustments MUST BE performed by qualified service personnel.
- DO NOT operate the instrument near or in the presence of flammable gases or fumes.

DETAILED PRECAUTIONS.

The following WARNINGS, CAUTIONS and NOTES appear throughout the text of this manual and are repeated here for emphasis.

CAUTION

- All procedures and/or steps identified as must be followed exactly as written and according to industry accepted ESDS device handling procedures. Failure to comply WILL RESULT in ESDS damage.
- DO NOT use a nylon bristle brush in the solvent as the bristles may dissolve and cause damage to the circuit card or component.
- DO NOT use ultrasonic cleaning on parts or assemblies containing electrical or electronic components.
- DO NOT bend pins of electrical connectors when using fiber-bristle brush.
- Compressed air used for cleaning and/or drying can create airborne particles that may enter the eye. Goggles/faceshields should be worn. DO NOT direct air stream towards self or other personnel. Pressure should be restricted to a maximum of 15 psi to avoid personal injury.
- Under no circumstances should a wire brush, steel wool, or abrasive compound be used on any surface. Using these items will cause extensive damage to the instruments surface.

NOTE

DO NOT return any instrument or component to Weinschel Corporation without receiving prior factory authorization.

SAFETY SYMBOLS.

The following symbols are used to identify safety hazards found throughout this publication and/or located on the instrument.

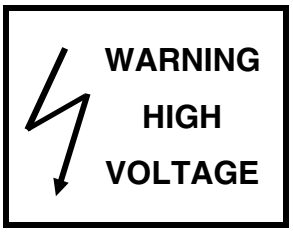

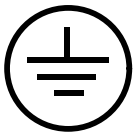

TABLE OF CONTENTS

1. GENERAL INFORMATION 4

1-1. PURPOSE 4
1-2. SCOPE 4
1-3. EQUIPMENT DESCRIPTION 4
1-4. UNPACKING AND INSPECTION 5
1-5. RESHIPMENT INSTRUCTIONS 5
1-6. STORAGE INSTRUCTIONS 5
1-7. RELATED MANUALS 6
1-8. ELECTROSTATIC DISCHARGE SENSITIVE (ESD) 6
1-9. ABBREVIATIONS & ACRONYMS 6
1-10. SAFETY CONSIDERATIONS 6
1-11. ENVIRONMENTAL REQUIREMENTS 6

2. SPECIFICATIONS 7

3. PHYSICAL DIMENSIONS 8

4. INSTALLATION 9

4-1. RACKMOUNTING 9
4-2. CONFIGURING THE 8210A-2-5 HARDWARE 9

5. IEEE-488 BUS OPERATION 10

5.1. IEEE-488 INTERFACE BUS CONNECTOR 10
5-2. GPIB ADDRESS/SERIAL COMMUNICATIONS SETTINGS 10-12
5-3. IEEE-488 (GPIB) BUS OPERATION 12

6. SERIAL (RS-232, RS-422 & RS-488) OPERATION 13

6-1. SERIAL OPERATION 13
6-2 RS-232 OPERATION 14
6-3. RS-422/RS-488 OPERATION 15

7. DEVICE INTERFACE BUS (DIB) 16

7-1. GENERAL OPERATION 16
7-2. DIB CONNECTOR 17

8. CONFIGURING & USING THE 8210A-2-5

8-1. MANUFACTURING SELECT SWITCH SW3 18
8-2. CONFIGURATION FUNDAMENTALS 18
8-3. DEVICE PROTOCOLS 18-19
8-4. THE VIRTUAL ATTENUATOR 19
8-5. ATTENUATOR GROUPS 19-20
8-6. THE VIRTUAL SWITCH 20
8-7. STATUS REPORTING 20-21

8-8. GENERAL SYNTAX STRUCTURE 21
8-8.1. SYNTAX OF QUERIES 21
8-8.2. SYNTAX OF COMMANDS 22
8-8.3. OUTPUT DATA FORMAT 23
8-8.4. NOTATIONAL CONVENTION 23
8-9. 488.2 COMMON COMMANDS 24-25
8-10. DEVICE ASSIGNMENT & CONFIGURATION COMMANDS 26-28
8-11. ATTENUATOR ASSIGNMENT COMMANDS 29
8-12. ATTENUATOR CONTROL COMMANDS 30-32
8-13. SWITCH ASSIGNMENT COMMANDS 33
8-14. SWITCH CONTROL COMMANDS 34
8-15. GROUP ASSIGNMENT COMMANDS 35
8-16. MACRO COMMANDS 36
8-17. MEMORY COMMANDS 37
8-18. MISC COMMANDS 38-39
8-19. DEVICE INTERFACE BUS CONTROL COMMANDS 39
8-20. BASE PROTOCOL COMMANDS 40
8-21. STEP ATTENUATOR PROTOCOL COMMANDS 41-42
8-22. SWITCH PROTOCOL COMMANDS 43

9. PROGRAMMING AND CONFIGURATION EXAMPLES 44

EXAMPLE 1. SINGLE ATTENUATOR 44
EXAMPLE 2: ULTIPLE ATTENUATORS 44
EXAMPLE 3: VRTUAL ATTENUATOR 45
EXAMPLE 4: ATTENUATOR GROUPS 46
EXAMPLE 5: MULTIPLE VIRTUAL ATTENUATORS WITH GROUP 47
EXAMPLE 6: SINGLE SPDT SWITCH 48
EXAMPLE 7: MULTIPLE SPDT SWITCHES (VIRTUAL SWITCH) 48
EXAMPLE 8: MULTIPLE SP4T SWITCHES (VIRTUAL SWITCH) 49
EXAMPLE 9: USING MACROS TO SIMPLIFY PROGRAMMING MULTIPLE RF SWITCHES 50

10. MAINTENANCE 51

11. APPLICATIONS 51

12. ACCESSORIES 51

13. CONTACTING AEROFLEX / WEINSCHEL 52

14. AEROFLEX / WEINSCHEL WARRANTY 52

1. GENERAL INFORMATION:

1-1 PURPOSE: This manual contains setup and operation information for the Aeroflex / Weinschel's Model 8210A S*martStep*™ Programmable Attenuator/Switch Controller. The manual also provides component location, reference designators, part numbers, and nomenclature to identify all the assemblies and sub-assemblies of the Attenuator Unit.

1-2 SCOPE: This manual is to be used in conjunction with the operation and maintenance of the Model 8210A S*martStep*™ Programmable Attenuator/Switch Controller. The manual also provides a general description; applications; and general maintenance procedures to maintain the controller.

1-3 EQUIPMENT DESCRIPTION: Aeroflex / Weinschel's Model 8210A ***SmartStep*** Programmable Attenuator/Switch Controller (Figure 1) is designed to interface with Weinschel's line of ***SmartStep*** programmable attenuators and represents a new concept in device control applications for bench test and subsystem designs. The 8210A provides a high-level interface from a standard communications interface including GPIB (IEEE-488) and RS-232/RS-422/ RS485, to the ***SmartStep***'s serial Driver Interface Bus.

The Device Interface Bus (DIB) is a system for connecting a number of relatively low-speed I/O devices to a host, providing a simple, uniform, and inexpensive way to control a variety of devices via a single port. The DIB is based on the two-wire I2C serial bus and several software protocol layers that allow the Model 8210A to address up to 125 peripheral devices, with serial data rates of up to 100 KHz. The DIB may also be used to supply DC power to the devices, resulting in a simple, low-cost interconnection system.

The SmartStep Programmable attenuator/switch controller is available in two models, each providing a different type of communications interface to suit user configuration requirements. Each model contains similar capabilities, and provides switch-selectable parameters to the interfaces' operation.

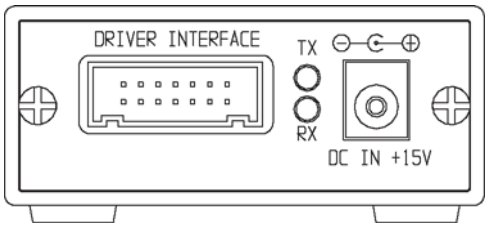

Figure 1. Model 8210A Front Panel

1-4. UNPACKING AND INSPECTION: Upon unpacking the equipment, retain the shipping container and packing material for future shipment for recalibration. Perform the following initial inspection:

a. Carefully look at the outside of the shipping container for discoloration, stains, charring, or other signs of exposure to excessive heat, moisture, or liquid chemicals. Check for any physical damage to the shipping container such as dents, snags, rips, crushed sections or areas, or similar signs of excessive shock or careless handling.

b. With the equipment and any accessory package removed from the shipping container, check each item against the packing list or Items Supplied List. If any items are missing, contact the Weinschel Corporation Customer Service Department.

c. Carefully inspect the equipment looking for dents, deep scratches, damaged or loose connector, or any other

d. signs of physical abuse or careless handling. If damage is found, forward an immediate request to the delivering carrier to perform an inspection and prepare a concealed-damage report. DO NOT destroy any packing material until it has been examined by an agent of the carrier. Concurrently, report the nature and extent of damage to Weinschel Corporation, giving equipment model and serial numbers, so that necessary action can be taken. Under U.S. shipping regulations, damage claims must be collected by the consignee; DO NOT return the equipment to Aeroflex / Weinschel Corporation until a claim for damages has been established.

1-5. RESHIPMENT: Use the best packaging materials available to protect the unit during storage or reshipment. When possible, use the original packing container and cushioning material. If the original packing materials are not available, use the following procedure:

a. Wrap the storage cases in sturdy paper or plastic;

b. Place the wrapped storage cases in a strong shipping container and place a layer of shock-absorbing material (3/4 inch minimum thickness) around all sides of the unit to provide a firm cushion and to prevent movement inside the container.

c. If shipping the unit for service, attach a tag to indicate:

1. model and serial numbers
2. service required
3. description of malfunction
4. return address
5. authorization to conduct repairs
6. return authorization number

d. Thoroughly seal the shipping container and mark it FRAGILE. Ship to:

Aeroflex / Weinschel, Inc.
Attn: Customer Service Department
5305 Spectrum Drive
Frederick, MD 21703-7362
or to an authorized sales representative.

1-6. STORAGE: Storage of the Model 8210A *SmartStep*™ Programmable Attenuator/Switch Controller is possible for extended periods without incurring damage to internal circuitry if the 8210A Series is packaged according to the instructions above. The safe limits for storage environment are as follows:

Temperature:	67° to +167 °F (-55° to +75 °C)
Humidity:	less than 95% without condensation
Altitude:	Up to 40,000 feet

1-7. RELATED MANUALS: The following manuals contain information that may be used in conjunction with this manual to operate, service, or calibrate this instrument.

Manual	Title
H4-1 and H4-2	Federal Supply Code for Manufacturers Cataloging Handbook

1-8. ELECTROSTATIC DISCHARGE SENSITIVE: The equipment documented in this manual contains certain Electrostatic Discharge Sensitive (ESDS) components or parts. Therefore, certain procedures/steps are identified by the use of the symbol . This symbol is used in two ways:

CAUTION

All procedures and/or steps identified as must be followed exactly as written and according to accepted ESDS device handling procedures. Failure to comply **WILL RESULT** in ESDS damage.

a. When the ESDS symbol is placed between a paragraph number and title all of that paragraph, including all subparagraphs, is considered ESDS device handling procedure.

b. When the ESDS symbol is placed between a procedure/step number and the text , all of that procedure is considered an ESDS device handling procedure.

1-9. ABBREVIATIONS AND ACRONYMS: The following list contains abbreviations used throughout this manual. Abbreviations and acronyms that are not listed conform to MIL-STD-12D.

DUT	Device Under Test
ESDS	Electrostatic Discharge Sensitive
DIB	Device Interface Bus
TBD	To Be Determined

1-10. SAFETY CONSIDERATIONS: The Model 8210A Programmable Attenuator/Switch Controller and all related documentation must be reviewed for familiarization with safety markings and procedures before any operation and/or service. Refer to the SAFETY SUMMARY located at the beginning of this manual for a summary of safety information and procedures. Following these simple safety precautions will ensure safe operation and service of the Attenuator Unit.

1-11. ENVIRONMENTAL REQUIREMENTS: This instrument performs best within its specifications when operated within a controlled environment having an ambient temperature of 0°± 50°C, Relative Humidity of up to 95% non condensing, and a altitude of less than 40,000 feet. Operating beyond these limits can affect the accuracy and performance of the instrument and damage internal circuitry.

2. SPECIFICATIONS:

DC Input	**Connector:** 2.5mm barrel style **Requirements**: +12 to +15 Vdc @ 250 mA
Driver Interface	**Connector:** 14-pin 0.025" square post header @ 0.1" centers. Mates with AMP 746285-2 or equivalent. **Signals :** SDA serial data SDC serial clock VDC DC supply voltage GND ground **VDC Output current:** 2 A maximum **Maximum cable length:** 10 Meters (1000 pF maximum capacitance) **Data Transfer Rate:** 100 KHz
Environmental	**Operating Temperature:** 0 to +50°C **Storage Temperature:** 67° to +167 °F (-55° to +75°C) **Humidity:** 95% **Altitude:** 40,000' (12,192M)
IEEE-488 Bus [1] **(8210A-1)**	**Connector:** 24-pin per IEEE-488.1 **Protocols:** per IEEE-488.2 **Indicators:** Remote, Listen
RS-232 Bus[2] **(8210A-2)**	**Connector:** 9-pin male D **Signals:** TXD, RXD, RTS, CTS, DTR, GND **Baud Rates:** 2400, 9600, 19200, and 38400 **Data Bits:** 8 **Handshaking:** None, RTS/CTS, XON/XOFF **Parity:** None, Odd, Even **Indicators:** Tx (Transmit) and Rx (Receive)
RS-422 Bus [3] **&** **RS-485 Bus**[4] **(8210A-2)**	**Connector:** 9-pin male D **Signals:** TXD+, TDX-, RXD+, RTX-, RTS+, RTS-, CTS+, CTS **Baud Rates:** 2400, 9600, 19200, and 38400 **Data Bits:** 8 **Handshaking:** None, RTS/CTS, XON/XOFF **Parity:** None, Odd, Even **Indicators:** Tx (Transmit) and Rx (Receive Active)

NOTES:

1. GPIB/IEEE-488 model allows user-selectable addresses.
2. RS-232 can be used with standard PC serial port for short and medium distances (up to approximately 50 ft).
3. RS-422, designed for very long distance communications (4000 ft) & optimized as a single node protocol, typically with one device connected to a single port.
4. RS-485, designed for very long distance communications (4000 ft) & optimized for multi-drop connections that can used to create a low cost network.

3. PHYSICAL DIMENSIONS:

Model 8210A-1 (IEEE-488):

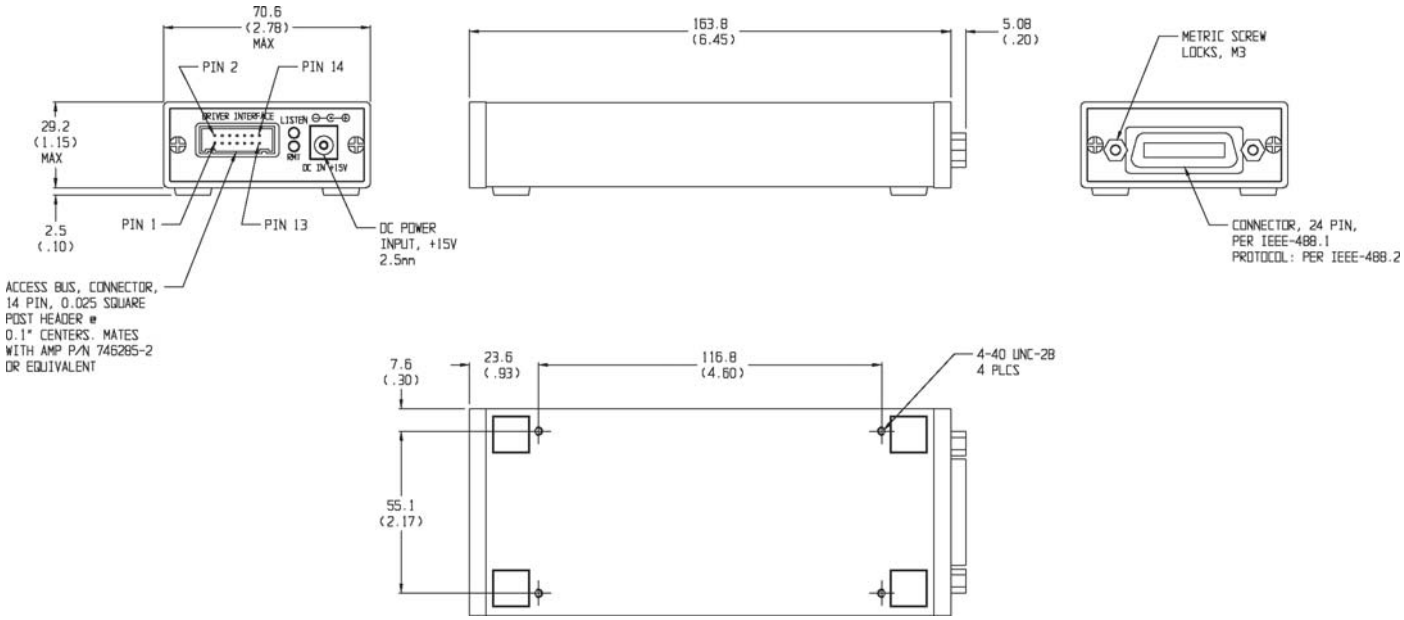

Model 8210A-2 (RS-232, RS-422 & RS-485):

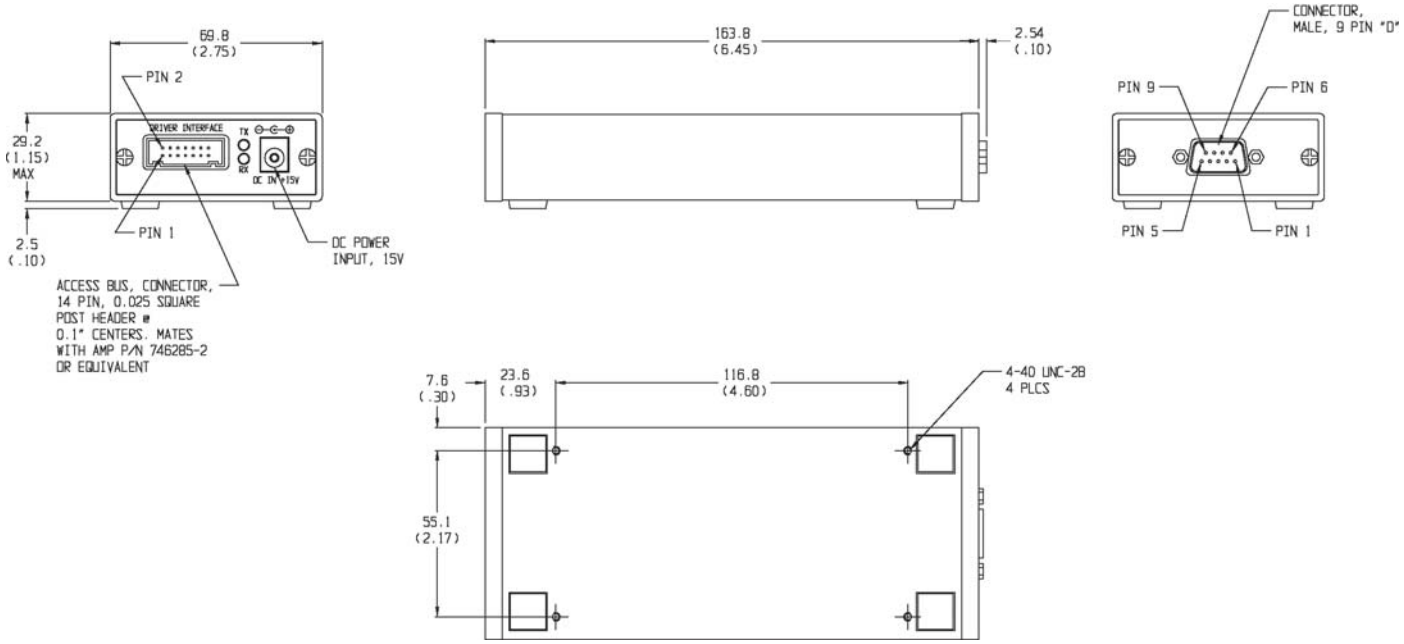

Note: All dimensions are given in mm (inches) and are maximum, unless specified.

4. INSTALLATION:

4-1. MOUNTING: Each ***SmartStep*** Interface is supplied with four 4-40 UNC-2B mounting holes located on bottom side of the housing. Screw penetration into housing is 3/16" maximum. See paragraph 3 for mounting location.

4-2 CONFIGURING THE 8210A HARDWARE: Figure 2 and the following steps are provided as a guideline in connecting up the Model 8210A and its associated system components.

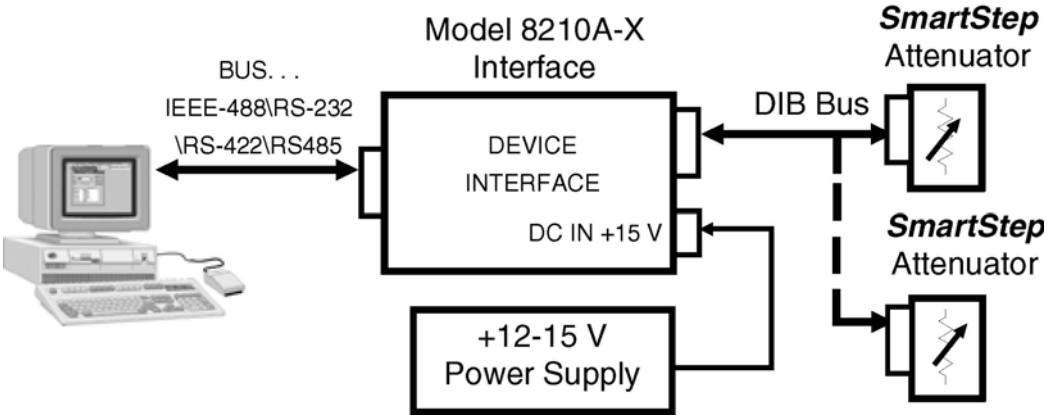

Figure 2. Sample Interconnection Diagram

a. Setup the IEEE-488 bus address or RS-232/422 Communications options for your application using paragraph 5-2 and Figure 3.

b. Connect the desired controller to the Model 8210A-X's bus connector. For specific connector details reference the following:

Model Bus	Type	Paragraph
8210A-1	IEEE-488	5-2
8210A-2	RS-232	6-2
8210A-2	RS-422	6-3

c. Using the interconnect cable (P/N 193-8013) supplied with the Model 8210A, connect the ***SmartStep*** Attenuator or other device to the Model 8210A's Driver Interface connector. For specific Device Interface connector details, refer to paragraph 5-4. Refer to paragraph 8 to order additional interface cables and other accessories for connecting multiple attenuators or other devices to the Model 8210A.

d. Connect a +12 to +15 V Power Supply to the Model 8210A's DC IN +15V Input Connector which is located on the Model 8210A front panel (Figure 1), is a standard 2.5mm barrel style DC jack. Refer to accessories for available supply.

5. IEEE-488 (GPIB) OPERATION:

The following paragraphs provide setup and general guidelines for operating the Model 8210A-1 ***SmartStep*** Programmable Attenuator/Switch Controller.

5-1. IEEE-488 INTERFACE BUS CONNECTOR: Joining the Model 8210A-1 to a system controller requires the connection of IEEE-488 control bus cable to the IEEE-488 INTERFACE BUS connector located on the rear panel. Figure 3 shows the connector's contact pin numbering scheme and lists the signal designator for signal present at each contact pin.

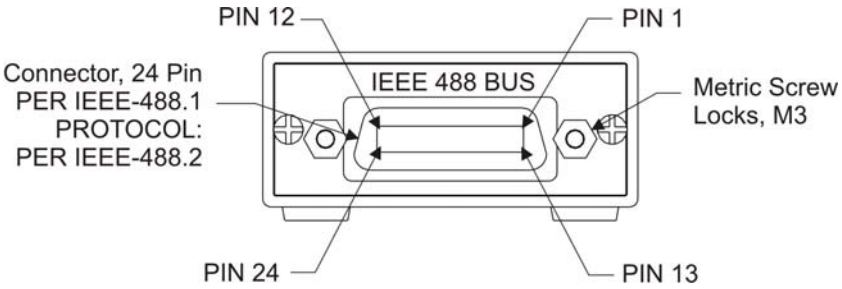

PIN No.	SIGNAL LINE	PIN No.	SIGNAL LINE
1	DIO 1	13	DIO 5
2	DIO 2	14	DIO 6
3	DIO 3	15	DIO 7
4	DIO 4	16	DIO 8
5	EOI (24)**	17	REN (24)**
6	DAV	18	GND (6)*
7	NRFD	19	GND (7)*
8	NDAC	20	GND (8)*
9	IFC	21	GND (9)*
10	SRQ	22	GND (10)*
11	ATN	23	GND (11)*
12	SHIELD	24	GND, LOGIC
* GND (N) refer to the signal ground return of the referenced pin. ** Return pin on pin 24.			

Figure 3. IEEE-488 Interface Bus Pin Locations

5-2. GPIB ADDRESS/SERIAL COMMUNICATIONS SETTINGS: The GPIB Bus Address and Serial Communications options are programmed via an internal 8 position DIP switch SW1 which is located on the rear panel. The switch is shared between the two functions, with SW1-1 controlling the selection. When SW1-1 is OFF, the remaining switches set the GPIB bus address. Likewise, when SW1-1 is ON, the switches are used to select the various serial options, including baud rate, parity, and handshaking. Refer to Figure 5 for switch location.

To configure the IEEE-488 bus address or serial communications parameters, select the appropriate switch setting using the tables located in below (Figure 4).

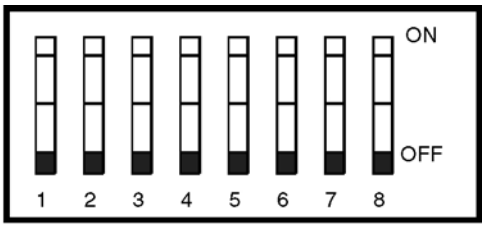

Note: All switches are shown in the OFF position.

GPIB	SW1	Serial	Serial Parameters
SP	1	SP	Mode Select On = Serial parameters Off = GPIB address
- - -	2	Echo	Echo Echo Enable On = Echo received data Off = No echo
- - -	3	HndshkSel	Handshaking Select On = RTS/CTS Off = XON/XOFF
A4 (16)	4	HndshkEna	Handshake Enable On = Enabled Off = Disabled
A3 (8)	5	ParitySel	Parity Select On = Odd Off = Even
A2 (4)	6	ParityEna	Parity Enable On = Enabled Off = Disabled
A1 (2) A0 (1)	7 8	BR1 BR2	BaudRate Select (see below) BaudRate Select BR1 BR0 RATE 0 0 2400 0 1 9600 1 0 19200 1 1 38400

Note: The GPIB Bus address is selectable from 0 to 30 via the rear panel dip switch. This switch is factory set to 10.

IEEE-488 Address Truth Table

Switch Number	4	5	6	7	8
Decimal Weight	16	8	4	2	1
Address:					
0	0	0	0	0	0
1	0	0	0	0	1
2	0	0	0	1	0
3	0	0	0	1	1
4	0	0	1	0	0
5	0	0	1	0	1
6	0	0	1	1	0
7	0	0	1	1	1
8	0	1	0	0	0
9	0	1	0	0	1
10	0	1	0	1	0
20	1	0	1	0	0
30	1	1	1	1	0

Figure 4. Internal Dip Switch

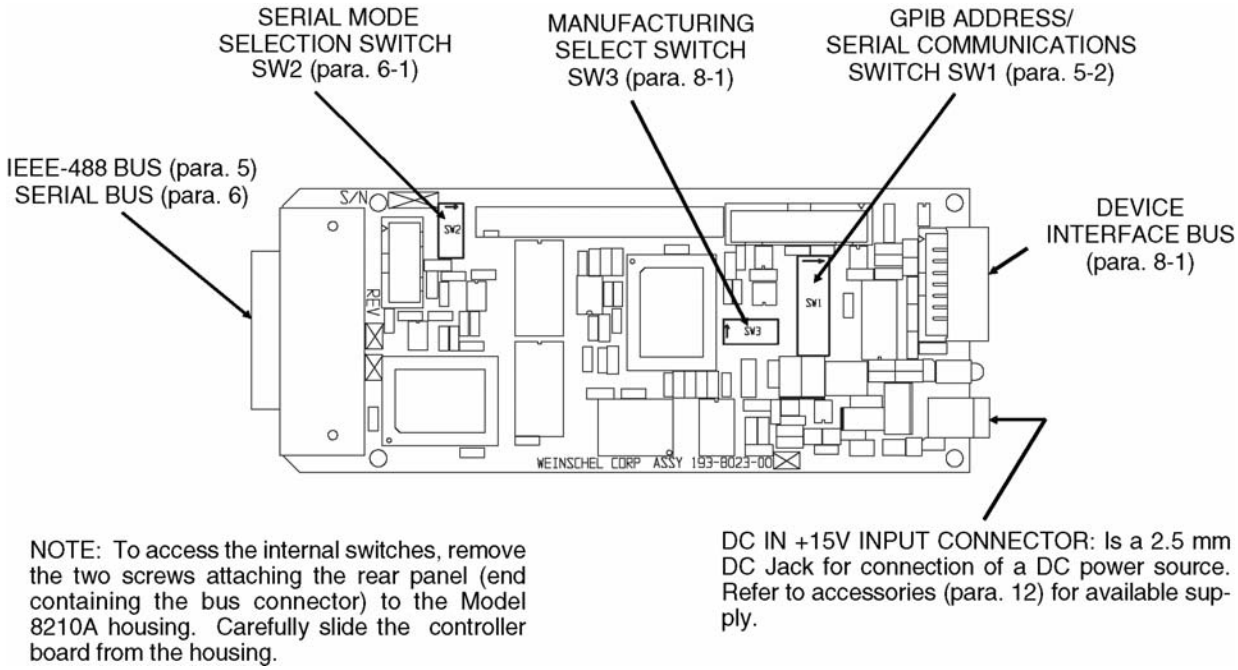

Figure 5. Model 8210A Internal Switch Locations

5-3. IEEE-488 (GPIB) Bus Operation

The internal functions of Model 8210A are controlled via an IEEE-488 bus and an external controller. The front panel LSN and RMT indicators are used as status indicators for the Model 8210A *SmartStep* Interface's IEEE-488 bus operation. During bus operation a flashing LSN indicates that the Model 8210A is receiving. The RMT indicator is illuminated when the Model 8210A is in the remote state.

The table below summarizes the IEEE-488.1 interface functions that are implemented by the Model 8210A.

Interface Function	Subset	Description
Source Handshake	SH1	Fully implemented
Acceptor Handshake	AH1	Fully implemented
Talker	T6	All basic Talker functions No extended addressing
Listener	L4	All basic Listener functions. No extended addressing
Service Request	SR1	Fully implemented
Remote/Local	RL1	Fully implemented
Parallel Poll	PP0	No Parallel Poll Capability
Device Clear	DC1	Fully implemented
Device Trigger	DT0	No Trigger
Controller	C0	No Controller Functions
Electrical Interface	E2	All tri-state drivers

The GPIB interface of the 8210A is IEEE-488.2 compliant. The 8210A recognizes instructions and data sent via the GPIB interface in the form of program messages comprised of ASCII characters. A program message is comprised of a sequence of program message units separated by semicolons and terminated by a line terminator (LINE END). A line terminator takes the form of an ASCII LF character (0AH), or an EOI signal asserted with the last data byte, or both. The 8210A program message units may be divided into two syntax groups: commands and queries. Refer to the section on command syntax for more information.

6. SERIAL (RS-232, RS-232 & RS-485) OPERATION:

6-1. Serial Operation. The serial interface (RS232/RS422) provides a means of remotely programming the 8210A via external computer. The 8210A provides for user-selectable communications parameters via a DIP switch (SW1), including baud rate, data format, and handshaking method. LED indicators are provided for transmit (TX) and receive (RX) activity. Selection between RS232/RS422 mode is controlled via an internal 4 position DIP switch SW2, which also provides for user-selectable 120 ohm terminations for the RS422 receiver lines. The RS422 mode transceivers are electrically compatible with RS-422 or RS485.

SW2	RS232	RS422 RS485	Description
1	OFF	User Select	CTS Termination On = Termination Off = No Termination
2	OFF	User Select	RXD Termination On = Termination Off = No Termination
3	OFF	ON	RI/RTS Select
4	ON	OFF	Serial Mode On = RS232 Off = RS422

The data format includes a start bit, eight data bits, and one stop bit (N81). The Baud Rate may be set to 2400, 9600, 19200, or 34800. Parity selections include settings for None, Even, or Odd parity. Handshaking may be enabled, if desired, and the method may be set to either hardware (RTS/CTS) or software (XON/XOFF). For interactive terminal use, echoing may be enabled, in which the 8210A will echo all characters received back to the terminal.

All data and commands are encoded using the ASCII character set. The syntax for commands is the same as for GPIB operation, and uses the syntax structure defined by IEEE 488.2, with the exception of the command termination rules. Commands sent to the 8210A may be terminated with either an ASCII CR (0x0D) or ASCII LF (0x0A) character. By default, all responses from the 8210A are terminated in an ASCII CR/LF sequence (0x0D followed by 0x0A).

Software handshaking uses the XON/XOFF scheme in which an ASCII DC3 (0x13) character is transmitted by the receiver to indicate that data transmission should be halted (XOFF), and an ASCII DC1 (0x11) character is transmitted to indicate that data transmission may continue (XON). Hardware handshaking utilizes the RTS and CTS lines. When the RTS output signal is asserted true, the unit is ready for data. This signal should be connected to the external computer's CTS input signal, so that when the receiver is ready, the transmitter may send data. When the unit is not ready for data, it unasserts the RTS signal, halting data transmission. Likewise, the unit monitors the CTS input signal during data transmission, halting transmission if the external computer unasserts it's RTS signal. In addition, the 8210A unasserts the RTS signal while command execution is in progress.

For those systems incorporating local front panel controls, the serial port can lockout local users, providing a Remote/ Local function similar to that of GPIB operation.

6-2. RS-232 Operation: The RS-232 Serial port is a 9-pin connector that is compatible with the pin-out of the serial port on a PC. It allows the use of a null-modem style cable. The pin-out for the connector is show below. For clarity, the signal names and directions are relative to the 8210A.

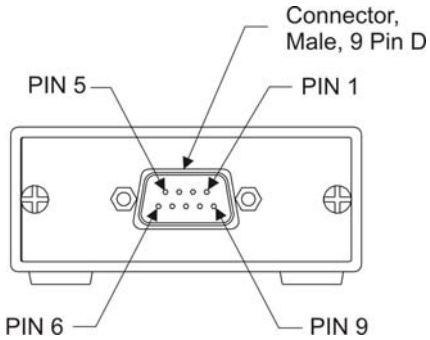

Pin	Signal Name	Description	Direction
1	DCD	unused	---
2	RxD	Receive data	input
3	TxD	Transmit data	output
4	DTR	Signals DTE is on-line	output
5	GND	Ground	---
6	DSR	unused	---
7	RTS	Signals DTE is ready	output
8	CTS	Signals DCE is ready	input
9	RI	unused	---

The DTR signal is asserted when power is on, indicating that the unit is ready.

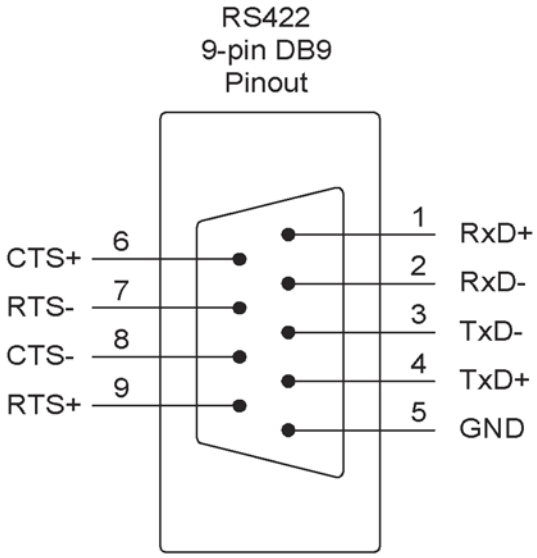

6-3. RS-422/RS485 OPERATION: The RS422/RS485 Serial mode is useful in applications requiring long cable lengths (up to5000 ft at 9600 baud), or in electrically noisy environments. All communication parameters available for the RS232 port are available under RS422 operation (baud rate, handshaking, etc).Full Duplex operation is supported. The RS422 port utilizes a9-pin connector. The pin-out for the connector is show below. For clarity, the signal names and directions are relative to the8210A. The signals are electrically compatible with either RS-422 or RS485.

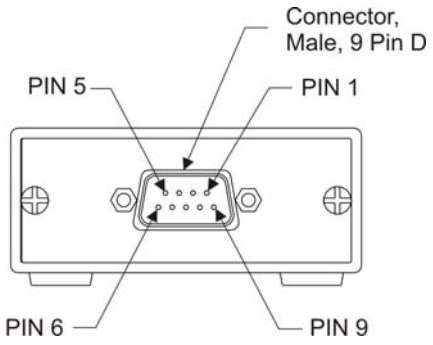

Pin	Signal Name	Description	Direction
1	RxD+	Receive data	input
2	RxD-	Receive data	input
3	TxD+	Transmit data	output
4	TxD-	Transmit data	output
5	GND	Ground	---
6	CTS+	Clear to Send	input
7	RTS-	Request to Send	output
8	CTS-	Clear to Send	input
9	RTS+	Request to Send	output

RS232
9-pin DB9
Pinout

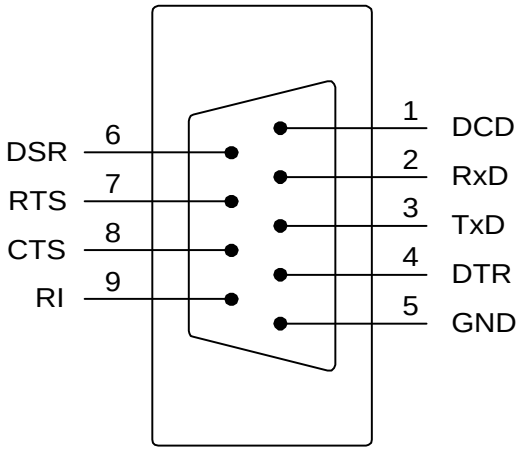

7. DEVICE INTERFACE BUS (DIB) OPERATION

7-1. GENERAL OPERATION: The Device Interface Bus is a serial bus that includes a physical layer based on the two-wire I^2C serial bus developed by Philips, and several software layers. The software layers are based on the ACCESS.Bus protocols V2.2, and include a base protocol, and several specific device protocols, along with specific Weinschel extensions to control RF devices.

The base protocol defines standard messages for device communication, device initialization, device identifications, address assignment, and a message protocol for device reports and control information.

The DIB is based on two wires, serial data (SDA) and serial clock (SCL), which carry information between the devices connected to the bus. Following initialization, each device is recognized by a unique address and can operate as either a master transmitter or slave receiver. A master is the device which initiates a data transfer on the bus and generates the clock signals to permit that transfer. The master device always transmits data to the slave. Any device addressed by the master is considered a slave. The DIB is a multi-master bus. Every device connected to the DIB is capable of being both a bus master and a bus slave.

Both SDA and SCL are bi-directional lines, connected to a positive supply voltage via a current source or pull-up resistor. When the bus is free, both lines are HIGH. The output stages of devices connected to the bus have an open-drain or open collector in order to perform a wired-AND function. Data on the I^2C bus can be transferred at a rate up to 100 kbit/s. The number of device interfaces connected to the bus is dependent on the bus capacitance limit of 1000 pF, the overall bus length of 10 meters, and the current available to power the devices.

The protocol of the messaging system used by the 8210A uses available length format with five fields, including the destination address, source address, message length, 0 to 127 data bytes, and a checksum.

Device Identification on the bus is provided by a unique 28-byte sequence that provides the protocol revision, vendor, module revision, 8 character module name, and a 32-bit device id. For most devices, this device id is the serial number of the device, however, a non-serialized device may generate a random negative 32-bit number for use as an id. Device Capabilities is a set of information that describes the functional characteristics of the device, along with the proper API (Applications Programming Interface) to use in communicating with the device. The purpose of capabilities information is to allow the 8210A to recognize and use the features of devices without prior knowledge of their particular implementation. Capabilities information provides a level of device independence and modularity. For example, consider two different types of attenuation devices, a step attenuator and a pin-diode attenuator. While each device has its' own unique set of characteristics, they both are capable of setting an attenuation value. By similar devices providing a consistent API to the 8210A, the user is freed from the concerns of the low-level programming required to control each device.

7-2. DIB CONNECTOR. This connector (shown below) is a 14-pin 0.025" square post header @ 0.1" centers and is located on the front panel of the Model 8210A and mates with AMP connector P/N 746285-2 or equivalent.

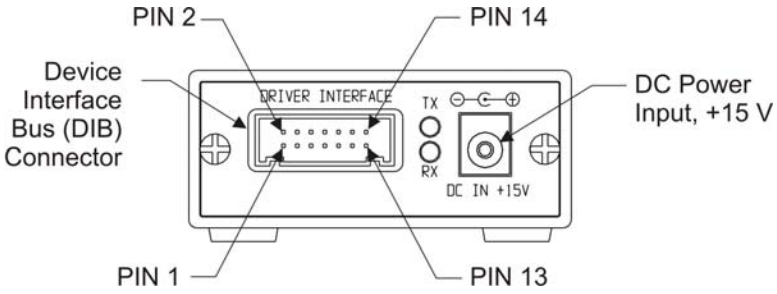

Name	Pin	Description
VIN	1, 2	dc Supply Voltage, +12 to +15 V
GND	3, 4	dc Return
D0/SDA	7	SDA
D1/SCL	8	SCL
GND	5, 6	GND
	11, 12	
	9, 10	
/I2C	13	Mode Select Output
/RST	14	Output

8. CONFIGURING & USING THE 8210A

8-1. MANUFACTURING SELECT SWITCH SW3:

NOTE: DO NOT change these switches from the default setting sunless instructed to do so by the factory. This information is provided for reference only (Figure 5 shows the location of this switch).

SW3	Description	
1	UCS	On = Enabled (Default) Off = Disabled
2	MCS	On = Enabled Off = Disabled (Default)
3	NMI Disable	On = Enabled (Default) Off = Disabled
4	Flash Monitor	On = Enabled Off = Disabled (Default)

8-2. CONFIGURATION FUNDAMENTALS: The configuration process is used to detect the devices that are present on the bus, assign each device a unique address, and connect devices to the appropriate software protocol . When reset or powered-up, all devices always revert to a default address of110 (0x6E). To begin address assignment, the 8210A host which resides at address 0x50, sends an Identification Request message to the default address. Every device at this address then responds with an Identification Reply message. As each device sends its message, the arbitration mechanism automatically separates the messages based on the identification strings. The 8210A can then assign an address to each device by including the matching identification string in an Assign Address message. A device that receives this message and finds a complete match with the identification string moves its device address to the new assigned value. After assigning a unique address to a device, 8210A retrieves the device's Capabilities string. The 8210A then parses this Capabilities string to choose the appropriate application protocol for the device. During this configuration process, the front panel LED's flash at a rapid rate. When completed, the LED's will extinguish, unless a configuration discrepancy is encountered, in which case they will remain illuminated.

As can be seen from the above discussion, the assignment of addresses to devices during the configuration phase is totally arbitrary, and will most probably change each time the configuration process is performed. This presents us with the following problem, especially for systems containing multiple devices...how does one send commands to a particular device? One method is by requesting a list of all the configured devices and scanning the list to find the device model, id, and address information. The 8210A provides a much simpler and easier method - assigning a name to a device. The 8210A allows the user to assign an alphanumeric name of up to 10 characters in length to a device, and can store this association in it's non-volatile EEPROM memory for future use. As part of the power-up configuration process, the 8210A will automatically recall and assign these names to the appropriate devices. This one-time setup process can greatly simplify the users software, as certain high-level commands require the use of a device name as one of the command parameters.

8-3. DEVICE PROTOCOLS. All devices connected to the 8210A understand a core set of commands, referred to as the Base Protocol, which is used in the basic transfer of commands and data. In addition to this base set of commands, different device types require their own unique set of commands, or protocol, in order to function. For example, an attenuation device would be expected to have a different programming model than say, a switch controller. On the other hand, devices may be similar in nature, with only slight differences in their command sets. The 8210A architecture allows protocols to be structured in a hierarchical or tree fashion where protocols may build on the capabilities of parent protocols, inheriting the functionality of the parent.

Currently, there are four protocols. These are the Base, Attn, StepAttn, and Switch protocols. They are arranged as follows:

```
Base Protocol
│
├── Attn Protocol
│     └── StepAttn Protocol
│
└── Switch Protocol
```

Devices that support the Attn Protocol also include support for the Base Protocol. Such a device does not, however, include support for the StepAttn Protocol, and would not be able to execute commands supported by this protocol. On the other hand, a device supporting the StepAttn Protocol includes support forall protocols above it, including both the Attn Protocol and the Base Protocol. The 8210A assigns a protocol to a device based on information returned by the device during the configuration process. This protocol selection allows the 8210A to determine the appropriate set of commands for use in controlling the device.

To illustrate the usage of these protocols, let's consider an example. In reviewing the command set, one finds that the Attn Protocol supports a command for setting the attenuation value ofa device, in dB. The Weinschel SmartStep series of attenuators utilize the StepAttn Protocol. Since the StepAttn protocol is derived from the Attn protocol, the SmartStep attenuators inherit the use of this command. The command syntax and functionality is the same, whether programming the Attn or the StepAttn protocol. This brings us to our next topic.

8-4. THE VIRTUAL ATTENUATOR. Sometimes, when constructing a system or subsystem, you cannot find a device that provides quite the functionality that you require. Assume you need a large attenuation range, but a small incremental step size. Typically, one would be forced to use two physical attenuators connected in series to achieve this goal. For example, let's assume there is a requirement for an attenuator with a total attenuation > 80dB, with a resolution of 1 dB over the DC-18 GHz frequency range. One could combine a Model 150T-70 (0-70dB/10dB steps) with a Model 150T-11 (0-11dB/1dB steps) to meet this goal. Unfortunately, the programming burden has increased dramatically, since you must now not only write the software to control two separate devices, but also develop an algorithm for determining the appropriate settings for each device. In addition, if your requirements were to change perhaps a larger attenuation range, or a different step size, these algorithms would have to change accordingly. The 8210A provides a solution to this dilemma with the ability to create and define a virtual device. A virtual device allows the user to construct a device by combining the attributes of several physical devices, and be able to program this combination as if it were one physical device! Revisiting our example above, we can create a virtual attenuator with an attenuation range of 81dB/1dBsteps, effectively creating a "150T-81". Controlling this new device requires no more programming than controlling a single attenuator.

The 8210A currently supports up to 32 Virtual Attenuator devices, each of which allow up to four physical attenuators to be combined into a single "device". The Virtual Attenuator uses the Attn Protocol command set, providing the same programming interface as other attenuator devices. During the setup process, the user assigns a name to the virtual attenuator, which may be stored in the 8210A's non-volatile EEPROM memory for future use. During the power-up configuration process, the 8210A will automatically recall and assign these virtual devices.

8-5. ATTENUATOR GROUPS. Attenuator groups provide the ability to associate a list of multiple attenuators (either physical or virtual) with a single group name, and allow commands to be executed across all the attenuators in the group. For example, let's assume that a portion of a system contains 8 attenuators, and you wish to increment the attenuation value of each of the eight attenuators. You could send eight separate INCR commands, one to each of the attenuators. An easier, and faster, method would be to combine the eight attenuators into a group, and then send a single INCR command to the group. Groups are a convenient method of reducing program complexity, and can radically reduce communication overheads. In the example above, the eight separate INCR commands would have required approximately 104 characters to be transmitted. If serial communications were being used with a baud rate of 9600, this would require a minimum of 108 msec just for the character transmissions. In contrast, the single group INCR command would have only required 8 characters, resulting in over a 12 times increase in throughput! With a few exceptions, most of the frequently used commands that apply to attenuators may also be used on groups, including ATTN, RELATTN, REF,STEPSIZE, INCR, and DECR.

The 8210A currently supports up to 4 attenuator groups, each of which allow up to 32 physical or virtual attenuators. During the setup process, the user assigns a name to the group, and lists the attenuators that comprise the group, which may be stored in the8210A's non-volatile EEPROM memory for future use. During the power-up configuration process, the 8210A will automatically recall and assign these group associations.

8-6. THE VIRTUAL SWITCH. The Virtual Switch capabilities allow the user a convenient method of controlling devices such as RF switches by specifying the switch control line connections and operational mode via the193-8015 8-Channel Relay Output card. Outputs from the card may be divided into logical groups of from one to eight control signals. Each group is assigned a user-definable name, and maybe controlled separately from the other groups. This would allow the user to connect, say 8 SPDT RF switches to the Relay Output card, and control each switch independently without having to keep track of each switch's individual position. Another feature, which is useful for multi-line control applications, is the ability to specify whether the control signals in the group operate in an encoded or decoded fashion. For example, a SP3T switch typically requires 3 individual control signals, only one of which may be active at a time. These three control signals provide up to8 different programming codes from 000b to 111b, many of which are actually invalid settings in this application. By operating in Decoded mode, the virtual switch will only activate one output at a time, allowing the user to specify position 1, 2, or3 when programming.

The 8210A supports up to 32 Virtual Switch devices, each of which can support up to a maximum of 16 output signals. The Virtual Switch uses the Switch Protocol command set. During the setup process, the user assigns a name to the virtual switch, which may be stored in the 8210A's non-volatile EEPROM memory for future use. During the power-up configuration process, the8210A will automatically recall and assign these virtual devices.

8-7. STATUS REPORTING. The 8210 implements the 488.2 Status Reporting Structure, which utilizes the IEEE488.1 status byte with additional data structures and rules. The Status Byte Register can be read with either a serial poll (IEEE-488 operation only) or the *STB? common query command. The Service Request Enable Register allows the user to select which bits in the Status Byte Register may cause service requests. A bit value of one indicates that the corresponding event is enabled, while a bit value of zero disables an event. The Service Request Enable Register may be accessed with the *SRE and *SRE? common commands. The Status Byte Register may be cleared with the *CLS common command, with the exception of the MAV bit, which is controlled by the operation of the Output Queue.

Status Byte Register/ Service Request Enable Register Formats

D7	D6	D5	D4	D3	D2	D1	D0
	RQS	ESB	MAV				

Bit	Mnemonic	Description
6	RQS	Request Service: This bit, if set, indicates that the device is asserting the SRQ signal.
5	ESB	Event Status Bit: This bit is true when an enabled event in the Event Status Register is true.
4	MAV	Message Available: This bit is true when there is valid data available in the output queue.

The Standard Event Status Register is used to report various IEEE488.2-defined events. The register contents may be accessed with the *ESR? command. An Event Status Enable Register allows the user to select which bits in the ESR that will be reflected in the ESB summary message bit of the Status Byte Register. The Event Status Enable Register may be accessed with the *ESE and*ESE? common commands. The Event Status Register is cleared by an *ESR? query or *CLS common command.

Standard Event Status Register/ Standard Event Status Enable Register Formats

D7	D6	D5	D4	D3	D2	D1	D0
ON	URQ	CME	EXE	DDE	QYE	RQC	OPC

Bit	Mnemonic	Description
7	PON	Power On: This bit indicates that the device has powered-on
6	URQ	User Request: This event bit indicates that a local control is causing a User Request
5	CME	Command Error: The parser has detected a syntax error in the current command.
4	EXE	Execution Error: The command could not be properly executed due to an illegal input range or other inconsistent data.
3	DDE	Device Dependent Error: A command could not properly complete due to some device specific error
2	QYE	Query Error: This bit indicates that either an attempt has been made to read data when there was none present, or that data in the Output Queue has been lost
1	RQC	Request Control: The device is requesting control (not implemented)
0	OPC	Operation Complete: This bit is generated in response to an *OPC command. It indicates that the ITS 2000 has completed all pending operations.

The Status Reporting Registers may be used for serial communications, with certain limitations. The Status Byte Register can only be read via the *STB? query command, as the comm port does not provide for a serial poll operation. Also, as data in the Output Queue is sent automatically during serial operation, the MAV message available bit in the STB serves no purpose.

8-8. GENERAL SYNTAX STRUCTURE: The following paragraphs outline the general syntax and command structure for the Model 8210A. This structure is common to all bus flavors of the Model 8210A.

NOTE

In the descriptions that follow, the term whitespace is used to define a sequence of one or more combinations of ASCII Space (20h), Carriage return (0Dh), or Tab (09h) characters.

8-8.1 SYNTAX OF QUERIES: A query message unit is made up of a query header ending in an ASCII question mark character '?' (3FH), followed by optional whitespace, and ended by a program message terminator. To form a multiple query, separate the individual program message units with a semicolon.

Examples : "ATTN?"
"ASSIGN?"

b. Multiple Query Commands:

"ATTN?; ASSIGN?"

8-8.2 SYNTAX OF COMMANDS: A command message unit is made up of a command header, optionally followed by an argument and units, and ended by a program message terminator. If multiple commands are made on the same program line, separate the individual command messages with a semicolon.

Arguments - The 8210A supports a variety of argument types that can be used in program commands. These types are:

- Character Program Data
- Integer Numeric Program Data
- Real Numeric Program Data

Each data type has its own rules of syntax. The following paragraphs provide the syntax rules for each of the argument types listed above.

Character Program Data-This data type is comprised of the set of printable ASCII characters (excluding those used as delimiters). Character program data represents alpha or alphanumeric strings. The use of alpha characters is case-insensitive. If the first character of the string is not an alpha character, then the string must be delimited with either the ASCII single-quote (') or double-quote (") character in order to distinguish the string from a numeric data type.

Examples: ATTEN1
ON
"150T"

Integer Numeric Program Data-This data type is used to represent integer, binary, or hexidecimal numeric information, all of which may be used interchangeably. Integer data is comprised of the numeric digits '0'-'9', binary data is comprised of the digits '0' and '1' preceded by the characters '#B', and hexidecimal data is comprised of the digits '0'-'9', and the letters 'A'-'F', preceded by the characters '#H' or the C language style prefix '0x'.

Examples: 123 (integer)
#H55 (hex)
0xAA (hex)
#B1010 (binary)

Real Numeric Program Data-This data type includes decimal numbers containing a sign, decimal point, and/or an exponent. The format is as follows: [sign]digits[.[digits][E[sign]digits]]

Examples: 2
2.5
-35.25E+2

In the command descriptions that follow, argument types are also described using the following additional conventions to indicate the relative size of the parameter:

byte	- used to indicate an 8-bit unsigned integer
word	- used to indicate a 16-bit unsigned integer
int8	- 8-bit integer
int16	- 16-bit integer
int32	- 32-bit integer
string	- character data, including the max number of characters allowable. (i.e., string8 has a max of 8 chars)

8-8.3 OUTPUT DATA FORMAT. Output data from the Model 8210A consists of a series of ASCII digits and message strings, terminated with an ASCII Line-Feed character (0AH), in response to a program message that contains one or more query commands. In the case of multiple query commands in the same program message, the data resulting from each of the individual message units will be separated by an ASCII comma (2CH) character.

8-8.4 NOTATIONAL CONVENTION.

[ ] Brackets indicate optional arguments or parameters.

{ } One and only one of the enclosed entries must be selected unless the field is also surrounded by brackets, in which case it is optional.

... Ellipses indicate that the preceding argument or parameter may be repeated.

[,...] The preceding item may be repeated, but each repetition must be separated by a comma.

8-9. 488.2 COMMON COMMANDS

***CLS**

Function: Clears the Status Byte and Event Status Registers.
Syntax: *CLS
Argument(s): none
Remarks: This function is used to clear the Status Byte and the Event Status Registers.
Return Value: none
Example(s): *CLS

***ESE**

Function: Sets the Event Status Enable Register.
Syntax: *ESE *mask*
Argument(s): *mask* integer bitmask
Remarks: This function is used to set the Event Status Enable Register to the value specified by mask.
Return Value: none
Example(s): *ESE 255

***ESE?**

Function: Reads the Event Status Enable Register.
Syntax: *ESE?
Argument(s): none
Remarks: This function is used to read the Event Status Enable Register.
Return Value: *mask* integer register mask
Example(s): *ESE? returns the following '255'

***ESR?**

Function: Reads the Event Status Register
Syntax: *ESR?
Argument(s): none
Remarks: This function is used to read the Event Status Register. Reading the register clears it.
Return Value: *reg* integer register
Example(s): *ESR? returns the following '128'

***SRE**

Function: Sets the Status Byte Enable Register
Syntax: *SRE *mask*
Argument(s): *mask* integer bitmask
Remarks: This function is used to set the Status Byte Enable Register to the value specified by *mask*.
Return Value: none
Example(s): *SRE 255

***SRE?**

Function: Reads the Status Byte Enable Register.
Syntax: *SRE?
Argument(s): none
Remarks: This function is used to read the Status Byte Enable Register.
Return Value: *mask* integer register mask
Example(s): *SRE? returns the following '255'

***STB?**

Function: Reads the Status Byte Register.
Syntax: *STB?
Argument(s): none
Remarks: This function is used to read the Status Byte Register.
Return Value: *reg* integer register
Example(s): *STB? returns the following '96'

***IDN?**

Function: Reads the system identification information.
Syntax: *IDN?
Argument(s): none
Remarks: This function is used to read the system identification information, which is a string consisting of the following data: manufacturer, model, serial number, and firmware version.
Return Value: *mfg* integer count of devices
Example(s): *IDN? returns the following 'Weinschel,8210A Series, 123, 1.00A'

***RST**

Function: Performs a device reset.
Syntax: *RST
Argument(s): none
Remarks: This function is used to reset the device.
Return Value: none
Example(s): *RST

***OPC**

Function: Operation complete service request.
Syntax: *OPC
Argument(s): none
Remarks: This function generates the Operation Complete message (OPC) in the Standard Event Status Register when all pending device operations have finished.
Return Value: none
Example(s): *OPC

***OPC?**

Function: Operation complete query
Syntax: *OPC?
Argument(s): none
Remarks: This function loads a '1' into the output queue when the Program Message Unit is executed. Its primary use is to provide an indication of command completion by including the command as the last one in a series of commands.
Return Value: 1 integer command completed
Example(s): SAVE ASSIGN; *OPC? returns a '1' when the SAVE ASSIGN command completes.

***WAI**

Function: Wait To Continue
Syntax: *WAI
Argument(s): none
Remarks: This function prevents the8210A Series from executing any further commands or queries until there are no pending operations. The8210A Series executes all commands sequentially, and does not allow overlapping commands.
Return Value: none
Example(s): *WAI

***TST?**

Function: Self-test query
Syntax: *TST?Argument(s):none
Remarks: This function performs an internal self-test. Upon completion, the results of the test are loaded into the output queue.
Return Value: testresultsinteger'0' indicates test passed. Non-zero indicates test failed.
Example(s): *TST?returns a '0' when the test completes successfully.

8-9. Device Assignment & Configuration Commands

ASSIGN?

Function: Assign a name to a physical device
Syntax: ASSIGN *name* *model* *serialno*
Argument(s): *name* string10 device name
model string8 device model
serialno int16 device serial number
Remarks: This function is used to assign a user-definable name to a physical device. The device is identified by the *model* and *serialno* parameters, which may be obtained by using the LIST? DEVICE CONFIG command to see a list of the configured devices. Assigning a name to a device allows the user to refer to the device by name, instead of by address. The configuration process, upon detection of a device matching the *model* and *serialno*, will automatically associate the name with the device. Specifying a *serialno* of -1 will allow the 8210A to match any device of the appropriate model, however, use this feature with caution, since a system containing multiple instances of the same model will fail to configure appropriately. The assignment can be stored in non-volatile memory via the SAVE ASSIGN command, and will be recalled during system initialization. Up to 125 user-definable names may be assigned. Note that the assignment does not take effect until the next time device names are reassigned (see REASSIGN).
Return Value: none
Example(s): ASSIGN AT1 ’150T-70’ 103

ASSIGN?

Function: reads a device name assignment
Syntax: ASSIGN? *name*
Argument(s): *name* string10 device name
Remarks: This function is used to read the device model and serialno parameters associated with an assignment previously set using the ASSIGN command.
Return Value: *name* string10 device name
model string8 device model
serialno int16 device serial number
Example(s): ASSIGN? AT1 returns the following ’AT1, 150T-70, 103’

LIST? ASSIGN

Function: Reads a list of device assignments
Syntax: LIST? ASSIGN
Argument(s): none
Remarks: This function is used to read a list of all device assignments created using the ASSIGN command. The list contains a count of the assigned names, and a list of names. To see the actual device information referenced by each assignment, use the ASSIGN? command.
Return Value: *count* integer count of assignments
name stri ng10 device name
Example(s): LIST? ASSIGN returns the fol lowi ng ’4, AT1, AT2, SW1, SW2’

RECONFIG

Function: Run the system device configuration
Syntax: RECONFIG
Argument(s): none
Remarks: This function is used to run the system device configuration process that is performed at power-on, which can be used to install or remove a device. After the configuration process, then the device names are assigned (see REASSIGN).
Return Value: none
Example(s): RECONFIG

RECONFIG?

Function: Run the system device configuration, and returns results.
Syntax: RECONFIG?
Argument(s): none
Remarks: This query function performs the same configuration process as the RECONFIG command, and then returns a count of the devices installed.
Return Value: *count* integer count of devices successfully configured
Example(s): RECONFIG? returns the following ’2’ assuming there are two devices

REASSIGN

Function: Reassign device names.
Syntax: REASSIGN
Argument(s): none
Remarks: This function is used to reassign changes that may have been made to the device assignments with the ASSIGN, ASSIGN ATTN, and ASSIGN SWITCH commands. Unlike the RECONFIG command, it does not perform the physical device configuration process, and executes much faster.
Return Value: none
Example(s): REASSIGN

COUNT? DEVICE

Function: Reads the number of configured devices
Syntax: COUNT? DEVICE
Argument(s): none
Remarks: This function is used to read the number of installed and configured devices.
Return Value: count integer count of devices
Example(s): COUNT? DEVICE returns the following '4'

LIST? DEVICE

Function: Read device installation
Syntax: LIST? DEVICE Argument(s): none
Remarks: This function is used to read a list of the names of all physical devices that have been installed by the configuration process. It returns a count of the devices, and for each the device name.
Return Value:

count	integer	count of names
name	string10	name

Example(s): LIST? DEVICE returns the following '2, SW1, RFSWITCH'

LIST? DEVICE CONFIG

Function: Reads a list of installed devices
Syntax: LIST? DEVICE CONFIG
or LIST? DEV CFG
Argument(s): none
Remarks: This function is used to read a list of the physical devices that were installed by the configuration process. The list contains a count of the devices installed, and for each the device name, model, id, and address. The name returned is the device name assigned via the ASSIGN command. If the device does not have an assigned name, then the string NONAME is returned in this field. The *model* and *id* fields are read from the device, and the *addr* field is the Device Interface Bus address assigned by the 8210A configuration process.
Return Value:

count	integer	count of devices
name	string10	device name
model	string8	model
id	integer32	serial number
addr	int8	address

Example(s): LIST? DEVICE CONFIG returns the following '2, AT1, 150T-70, 102, 2, AT2, 150T-11, 113, 4'

CONFIG DEVICE COUNT

Function: Sets the count of devices for system configuration verification
Syntax: CONFIG DEVICE COUNT *devcnt*
Argument(s): *devcnt* integer count of physical devices
Remarks: This function is used to set the number of expected devices for the system configuration process. If during the configuration process at least devcnt number of physical devices are not found, the configuration process fails. The value can be stored in non-volatile memory via the SAVE CONFIG command, and will be recalled during system initialization.
Return Value: none
Example(s): CONFIG DEVICE COUNT 8
CFG DEV CNT 6

CONFIG? DEVICE COUNT

Function: reads the system device count configuration
Syntax: CONFIG? DEVICE COUNT
Argument(s): none
Remarks: This function is used to read the number of devices expected during the system configuration process. Return Value: devcnt integer count of devices
Example(s): CONFIG? DEVICE COUNT returns the following '8'

ADDR?

Function: Reads the Device Interface Bus address assigned to a device.

Syntax: This command has two forms: ADDR? *devname*
ADDR? *model id*

Argument(s):

devname	string10	assigned device name
or		
model	string8	device model
id	integer32	device serial number/id

Remarks: This function is used to read the address assigned to the specified device during the configuration process.

Return Value: *addr* integer address

Example(s): ADDR? AT1 returns ’2’
ADDR? 150T-11 103 returns ’2’

ISPRESENT?

Function: Checks for presence of a device

Syntax: ISPRESENT? [type] name

Argument(s):

type	optional string literal (DEVICE, ATTN, or SWITCH)	
name	string10	device name (physical or virtual)

Remarks: This function is used to check for the presence of a physical or virtual device. If the device specified by name is installed and configured, the query returns a ’1’, otherwise it returns a ’0’. The optional type parameter may be used to qualify a specific type of device. If type is not specified, then the name will be searched in the list of attenuators, switches, and devices, in that order.

Return Value: *flag* integer name found

Example(s): ISPRESENT? AT1 returns the following ’1’
ISPRESENT? SWITCH AT1 returns a ’0’ if AT1 is assigned to an attenuator, not a switch

8-11. Attenuator Assignment

ASSIGN ATTN

Function: Assign a virtual attenuator
Syntax: ASSIGN ATTN *name* devname [devname [devname [devname]]]
Argument(s): *name* string10 virtual attenuator name
devname string10 device name(s). see remarks.
Remarks: This function is used to assign a user-definable name and configuration to a virtual attenuator. The virtual attenuator may contain a reference for up to 4 physical devices, each of which must have been previously assigned a *devname* using the ASSIGN command. This function allows multiple attenuators to be logically joined to a single name, allowing the user to create an attenuator with the combined characteristics of the specified devices, perhaps to provide a larger maximum attenuation value, or a finer step size, or both. The assignment can be stored in non-volatile memory via the SAVE ASSIGN ATTN command, and will be recalled during system initialization. Up to 64 user-definable names may be assigned. Note that the assignment does not take effect until the next time device names are reassigned (see REASSIGN).
Return Value: none
Example(s): ASSIGN ATTN Chan1 AT1 AT2

ASSIGN? ATTN

Function: reads a virtual attenuator assignment
Syntax: ASSIGN? ATTN name
Argument(s): name string10 virtual attenuator name
Remarks: This function is used to read the device names associated with an assignment previously set using the ASSIGN ATTN command. It returns a count of the devices associated with name, and for each the device name.
Return Value: *count* integer count of device names
devname string10 device name
Example(s): ASSIGN? ATTN Chan1 returns the following '2, AT1, AT2'

COUNT? ATTN

Function: reads the number of configured attenuators
Syntax: COUNT? ATTN
Argument(s): none
Remarks: This function is used to read the number of installed and configured attenuators.
Return Value: count1 integer count of physical attenuators
count2 integer count of virtual attenuators
Example(s): COUNT? ATTN returns the following '4, 2'

LIST? ASSIGN ATTN

Function: Reads a list of virtual attenuator assignments
Syntax: LIST? ASSIGN ATTN
Argument(s): none
Remarks: This function is used to read a list of all virtual attenuator assignments created using the ASSIGN ATTN command. The list contains a count of the assigned names, and a list of the names. To see the actual devices referenced by the virtual attenuator, use the ASSIGN? ATTN command.
Return Value: *count* integer count of virtual attn assignments
name string10 attn name
Example(s): LIST? ASSIGN ATTN returns the following '1, Chan1'

LIST? ATTN

Function: Read Attenuator installation
Syntax: LIST? ATTN
Argument(s): none
Remarks: This function is used to read a list of the names of all attenuator devices that have been installed by the configuration process. This list includes both virtual attenuator devices (ASSIGN ATTN), and physical devices (ASSIGN) that support the AttnProtocol. This is a list of all names that support the ATTN command. It returns a count of the devices, and for each the device name.
Return Value: *count* integer count of names
name string10 name
Example(s): LIST? ATTN returns the following '3, AT1, AT2, Chan1'

8-12. Attenuator Control

ATTN

Function: Set attenuation
Syntax: ATTN name atten (specific form) or ATTN atten (non-specific form)

Argument(s): *name* string10 attenuator or group name
atten real desired value, in dB

Remarks: This function sets the attenuation of attenuator name to atten. This command may be used with both physical and virtual attenuation devices supporting the AttnProtocol. The parameter name must have been previously assigned using either the ASSIGN, ASSIGN ATTN, or GROUP command. The non-specific form of this command will set all attenuation devices found during the configuration process to the value atten. It may be used to initialize the system, or as an easy method of programming systems that contain a single attenuator. Also, this form allows the value of atten to be specified as -1, which results in each device being programmed to it's maximum attenuation value. If name is a group name, then the command is performed on each attenuator of the group.
Return Value: none
Example(s): ATTN AT1 63
ATTN ChanTwo 12.25
ATTN 45.0

ATTN?

Function: Read attenuation
Syntax: ATTN? name (specific form) or ATTN? (non-specific form)
Argument(s): *name* string10 attenuator name
Remarks: In the specific form, this function reads the attenuation of attenuator name. This command may be used with both physical and virtual attenuation devices supporting the AttnProtocol. The parameter name must have been previously assigned using either the ASSIGN or ASSIGN ATTN command. The non-specific form may be used in systems where there is only a single attenuator.
Return Value: *atten* real attenuation value, in dB
Example(s): ATTN? AT1 returns '63.00'

REF

Function: Sets reference attenuation
Syntax: REF name
Argument(s): *name* string10 attenuator or group name
Remarks: This function is used to set the reference level of the attenuator specified by name to the device's current setting. This command may be used with both physical and virtual attenuation devices supporting the AttnProtocol. The parameter name must have been previously assigned using either the ASSIGN, ASSIGN ATTN, or GROUP command. The reference attenuation is used by the RELATTN command to program an attenuation relative to a reference value. If name is a group name, then the command is performed on each attenuator of the group.
Return Value: none
Example(s): REF AT1 sets reference level for AT1 to the current setting

REF?

Function: Read reference setting
Syntax: REF? *name*
Argument(s): *name* string10 attenuator name
Remarks: This function reads the reference setting of attenuator name. This command may be used with both physical and virtual attenuation devices supporting the AttnProtocol. The parameter name must have been previously assigned using either the ASSIGN or ASSIGN ATTN command.
Return Value: *refatten* real reference attenuation value, in dB
Example(s): REF? AT1 returns '30.00'

RELATTN

Function: Sets attenuation relative to a reference setting
Syntax: RELATTN *name atten*
Argument(s): *name* string10 attenuator or group name
atten real desired value, in dB

Remarks: This function sets the attenuation of attenuator name to atten, relative to the reference value set by the REF command. This command may be used with both physical and virtual attenuation devices supporting the AttnProtocol. The parameter name must have been previously assigned using either the ASSIGN, ASSIGN ATTN, or GROUP command. If name is a group name, then the command is performed on each attenuator of the group.
Return Value: none
Example(s): RELATTN AT1 10 increases the atten setting of AT1 10dB from reference setting
RELATTN AT1 -10 decreases the atten setting of AT1 by 10dB from the reference setting

RELATTN?

Function: Read relative attenuation
Syntax: RELATTN? *name*
Argument(s): *name* string10 attenuator name
Remarks: This function reads the relative attenuation of attenuator name. This command may be used with both physical and virtual attenuation devices supporting the AttnProtocol. The parameter name must have been previously assigned using either the ASSIGN or ASSIGN ATTN command.
Return Value: relatten real relative attenuation value, in dB
Example(s): RELATTN? AT1 returns '-10.00'

STEPSIZE

Function: Sets attenuation stepsize
Syntax: STEPSIZE *name atten*
Argument(s): *name* string10 attenuator or group name
atten real desired stepsize value, in dB
Remarks: This function sets the attenuation stepsize for the INCR and DECR commands of attenuator name to atten. This command may be used with both physical and virtual attenuation devices supporting the AttnProtocol. The parameter name must have been previously assigned using either the ASSIGN, ASSIGN ATTN, or GROUP command. The default value of the attenuator's stepsize is the intrinsic resolution of the attenuator, ie a 127dB/1dB step attenuator has a default stepsize of 1dB. If name is a group name, then the command is performed on each attenuator of the group.
Return Value: none
Example(s): STEPSIZE AT1 10 changes the stepsize of AT1 to 10dB

STEPSIZE?

Function: Read attenuation stepsize
Syntax: STEPSIZE? name
Argument(s): *name* string10 attenuator name
Remarks: This function reads the attenuation stepsize of attenuator name. This command may be used with both physical and virtual attenuation devices supporting the AttnProtocol. The parameter name must have been previously assigned using either the ASSIGN or ASSIGN ATTN command.
Return Value: *atten* real attenuation stepsize value, in dB
Example(s): STEPSIZE? AT1 returns '10.00'

INCR

Function: Increments attenuator or switch from the current setting
Syntax: INCR name
Argument(s): *name* string10 attenuator, group, or switch name
Remarks: When used with attenuators, this function increments the attenuation setting of attenuator name by the value of the attenuator's programmed stepsize (see STEPSIZE command). When used with switches, the command will increment the switch setting of name by one. This command may be used with both physical and virtual attenuation or switch devices. The parameter name must have been previously assigned using either the ASSIGN, ASSIGN ATTN, ASSIGN SWITCH or GROUP command. If name is a group name, then the command is performed on each attenuator of the group.
Return Value: none
Example(s): INCR AT1

DECR

Function: Decrements attenuator or switch from the current setting
Syntax: INCR *name*
Argument(s): *name* string10 attenuator, group, or switch name
Remarks: When used with attenuators, this function decrements the attenuation setting of attenuator name by the value of the attenuator's programmed stepsize (see STEPSIZE command). When used with switches, the command will decrement the switch setting of name by one. This command may be used with both physical and virtual attenuation or switch devices. The parameter name must have been previously assigned using either the ASSIGN, ASSIGN ATTN, ASSIGN SWITCH, or GROUP command. If name is a group name, then the command is performed on each attenuator of the group.
Return Value: none
Example(s): DECR AT1

ATTN? GETCAP

Function: Reads the capability of an attenuator

Syntax: ATTN? GETCAP *name*

Argument(s): *name* string10 attenuator name

Remarks: This function reads the capability information of attenuator name. This command may be used with both physical and virtual attenuation devices supporting the AttnProtocol. The parameter name must have been previously assigned using either the ASSIGN or ASSIGN ATTN command. The capability information includes the maximum range of the device, and the step size, in dB.

Return Value: *attenrange* real max attenuation value, in dB
stepsize real stepsize, in dB

Example(s): ATTN? GETCAP AT1 returns ’127.00, 1.00’

8-13. Switch Assignment

ASSIGN SWITCH

Function: Assign a virtual switch
Syntax: ASSIGN SWITCH *name devname mask mode*
Argument(s):

name	string10	virtual switch name
devname	string10	device name
mask	integer16	output mask
mode	integer	operational mode (0=Encoded, 1=Decoded) (may also use the string literals ENCODE or DECODE)

Remarks: This function is used to assign a user-definable name and configuration to a virtual switch. The virtual switch contains a reference to a physical device which must have been previously assigned a *devname* using the ASSIGN command. The mask value allows the user to specify which outputs of the device are used to control the switch function. The mode allows a selection of Encoded or Decoded operational modes. The assignment can be stored in non-volatile memory via the SAVE ASSIGN SWITCH command, and will be recalled during system initialization. Up to 64 user-definable names may be assigned. Note that the assignment does not take effect until the next time device names are reassigned. (see REASSIGN)
Return Value: none
Example(s): ASSIGN SWITCH Rfswitch SW1 7 DECODE

ASSIGN? SWITCH

Function: reads a virtual switch assignment
Syntax: ASSIGN? SWITCH *name*
Argument(s):

name	string10	virtual switch name

Remarks: This function is used to read the device name and parameters associated with an assignment previously set using the ASSIGN SWITCH command. It returns the device name, mask, and mode.
Return Value:

devname	string10	device name
mask	integer16	output mask
mode	integer	operational mode (0=Encoded, 1Decoded)

Example(s): ASSIGN? SWITCH Rfswitch returns the following 'SW1, 7, 1'

LIST? ASSIGN SWITCH

Function: Reads a list of virtual switch assignments
Syntax: LIST? ASSIGN SWITCH
Argument(s): none
Remarks: This function is used to read a list of all virtual switch assignments created using the ASSIGN SWITCH command. The list contains a count of the assigned names, and a list of the names. To see the actual device referenced by the virtual switch, use the ASSIGN? SWITCH command.
Return Value:

count	integer	count of virtual switch assignments
name	string10	switch name

Example(s): LIST? ASSIGN SWITCH returns the following '1, SW1'

LIST? SWITCH

Function: Read Switch installation
Syntax: LIST? SWITCH
Argument(s): none
Remarks: This function is used to read a list of the names of all switch devices that have been installed by the configuration process. This list includes both virtual switch devices (ASSIGN SWITCH), and physical devices (ASSIGN) that support the SwitchProtocol. This is a list of all names that support the SWITCH command. It returns a count of the devices, and for each the device name.
Return Value:

count	integer	count of names
name	string10	name

Example(s): LIST? SWITCH returns the following '2, SW1, RFSWITCH

COUNT? SWITCH

Function: reads the number of configured switches
Syntax: COUNT? SWITCH
Argument(s): none
Remarks: This function is used to read the number of installed and configured switches.
Return Value:

count1	integer	count of physical switches
count2	integer	count of virtual switches

Example(s): COUNT? SWITCH returns the following '1, 8'

8-14. Switch Control

SWITCH

Function: Set switch value
Syntax: SWITCH name setting (specific form) or SWITCH setting (non-specific form)
Argument(s): *name* string10 switch name
setting integer16 desired switch setting
Remarks: This function sets the outputs of switch name to setting. This command may be used with both physical and virtual switch devices supporting the SwitchProtocol. The parameter name must have been previously assigned using either the ASSIGN or ASSIGN SWITCH command. The non-specific form of this command will set all switch devices found during the configuration process to the value setting. It may be used to initialize the system, or as an easy method of programming systems that contain a single switch. Also, this form allows the value of atten to be specified as -1, which results in each device being programmed to it's maximum attenuation value.
Return Value: none
Example(s): SWITCH SW1 1
SWITCH SwTwo 8 SWITCH 0

SWITCH?

Function: Read switch setting
Syntax: SWITCH? name (specific form) or SWITCH? (non-specific form)
Argument(s): *name* string10 switch name
Remarks: In the specific form, this function reads the setting of switch name. This command may be used with both physical and virtual switch devices supporting the SwitchProtocol. The parameter name must have been previously assigned using either the ASSIGN or ASSIGN SWITCH command. The non-specific form may be used in systems where there is only a single switch.
Return Value: *setting* integer16 setting
Example(s): SWITCH? SW1 returns '1'

SWITCH? GETCAP

Function: Reads the capability of a switch
Syntax: SWITCH? GETCAP name
Argument(s): *name* string10 switch name
Remarks: This function reads the capability information of switch name. This command may be used with both physical and virtual switch devices supporting the SwitchProtocol. The parameter name must have been previously assigned using either the ASSIGN or ASSIGN SWITCH command. The capability information includes the switch mask value of the device, and the operational mode.
Return Value: *mask* integer16 switch output mask
mode integer operational mode (0=encoded, 1=decoded)
Example(s): SWITCH? GETCAP SW1 returns '7, 1'

8-15. Group Assignment

GROUP

Function: Assign a group of attenuators
Syntax: GROUP *groupname attnname [attnname…]*
Argument(s): *groupname* string10 group name
attnname string10 attenuator name(s). see remarks.
Remarks: This function is used to assign a user-definable name and configuration to a group. The group may contain a reference for up to 32 attenuators, which may be any combination of physical or virtual attenuators. Each of the attenuators listed must have been previously assigned a name using either the ASSIGN or ASSIGN ATTN commands. Groups allow the user the ability to send commands to all members of the group. For example, sending an INCR command to a group will cause all members of the group to increment. The assignment can be stored in non-volatile memory via the SAVE GROUP command, and will be recalled during system initialization. Up to 4 user-definable group names may be assigned. Note that the assignment does not take effect until the next time device names are reassigned (see REASSIGN).
Return Value: none
Example(s): GROUP Group1 AT1 AT2 AT3 AT4 AT5

GROUP?

Function: reads a group assignment
Syntax: GROUP? *groupname*
Argument(s): *groupname* string10 group name
Remarks: This function is used to read the attenuator names associated with a group assignment previously set using the GROUP command. It returns a count of the attenuators associated with *groupname,* and for each the attenuator name.
Return Value: *count* integer count of attenuators
devname string10 attenuator name
Example(s): GROUP? Group1 returns the following ’5, AT1, AT2, AT3, AT4, AT5’

LIST? GROUP

Function: Reads a list of group assignments
Syntax: LIST? GROUP
Argument(s): none
Remarks: This function is used to read a list of all group assignments created using the GROUP command. The list contains a count of the assigned group names, and a list of the names. To see the actual attenuators referenced by the individual groups, use the GROUP? command.
Return Value: count integer count of group assignments *groupname* string10 group name
Example(s): LIST? GROUP returns the following ’2, GROUP1, GROUP2’

8-16. Macro Commands

MACRO

Function: Define a macro
Syntax: MACRO *name text*
Argument(s): *name* string10 macro name
text string macro body
Remarks: This function is used to define a macro. The macro name may be any user-defined string, and may also be the same as internal commands. The macro text defines the command(s) that will be executed when the macro is invoked. Macros allow for up to 9 replaceable parameters, which are designated $1, $2, up to $9. The special macro name "POWERON" is reserved for defining a macro that will automatically be executed by the system during the power-up configuration phase. The user may define up to 32 additional macros. Attempting to define more than the allowable number of macros will result in an execution error, and the user must delete an existing macro to make room for the new definition. A list of the currently defined macros may be obtained with the LIST? MACRO command. Macros can be up to 128 characters in length, and may be stored in the non-volatile memory via the SAVE MACRO command. If a macro name is the same as an internal command, the macro replaces the internal command. Macro expansion may be enabled/disabled with the EMC command.
Return Value: none
Example(s): MACRO "POWERON" "EMC 0; ATTN -1; EMC 1"

MACRO?

Function: Read a macro definition
Syntax: MACRO? *name*
Argument(s): name string10 macro name
Remarks: This function is used to read a macro definition.
Return Value: *text* string macro body
Example(s): MACRO? "POWERON" returns "EMC 0; ATTN -1; EMC 1"

LIST? MACRO

Function: Read list of macro names
Syntax: LIST? MACRO
Argument(s): none
Remarks: This function is used to read a list of the currently defined macro names that have been created via the MACRO command. It returns a count of the macros, and for each the macro name.
Return Value: *count* integer count of names name string10 name
Example(s): LIST? MACRO returns the following '1, POWERON'

EMC

Function: Enable/Disable macro expansion.
Syntax: EMC *ena*
Argument(s): *ena* integer enable flag
Remarks: This function is used to enable or disable macro expansion. If the value of *ena* is 0, than macros are disabled. Any other value enables macro expansion.
Return Value: none
Example(s): EMC 0

EMC?

Function: Read macro state
Syntax: EMC?
Argument(s): none
Remarks: This function is used to read the state of the macro enable flag.
Return Value: 0, macros are disabled
1, macros enabled
Example(s): EMC? returns '1'

8-17. Memory Commands

DELETE

Function: Deletes an assigned device name, virtual attenuator, virtual switch, group, or macro

Syntax:

DELETE ASSIGN	*name*	Deletes an assigned device name
DELETE ASSIGN ATTN	*name*	Deletes an assigned virtual attenuator name
DELETE ASSIGN SWITCH	*name*	Deletes an assigned virtual switch name
DELETE GROUP	*name*	Deletes an assigned group name
DELETE MACRO	*name*	Deletes a macro definition

Argument(s): *name* string10 device or macro name

Remarks: This function is used to remove an assigned name previously set with the ASSIGN or MACRO command. Note that this command does not effect any assignments contained in the non-volatile memory. Use the SAVE command if it is desired to update the contents of the EEPROM, permanently removing the device assignment.

Return Value: none

Example(s): DELETE ASSIGN AT1

SAVE

Function: Store assignments, configuration, or macros into non-volatile memory

Syntax:

SAVE ASSIGN	Saves device assignments
SAVE ASSIGN ATTN	Saves virtual attenuator assignments
SAVE ASSIGN SWITCH	Saves virtual switch assignments
SAVE GROUP	Saves group assignments
SAVE CONFIG	Saves system configuration information
SAVE MACRO	Saves macro definitions

Argument(s): none

Remarks: This function is used to save the currently defined assignments or macros into non-volatile EEPROM storage.

Return Value: none

Example(s): SAVE MACRO

ERASE

Function: Erase contents of non-volatile memory

Syntax: ERASE *section*

Argument(s): *section* string section name (see below)

Remarks: This function is used to erase sections of the EEPROM, effectively setting all parameters in the section to their default values. Valid settings for section include:

IDN	- erases model and serial number
GPIB	- erases GPIB configuration
SERIAL	- erases serial port configuration
SYSTEM	- erases system configuration
ASSIGN	- erases all device assignments, including virtuals and groups
MACRO	- erases all macros
EEPROM	- erases the entire memory

Return Value: none

Example(s): ERASE EEPROM

8-18. MISC Commands

REBOOT

Function: Performs a complete system reset
Syntax: REBOOT
Argument(s): none
Remarks: This function is used to perform a system reset, similar to a power on reset
Return Value: none
Example(s): REBOOT

ECHO

Function: Control serial port echoing
Syntax: ECHO *setting*
Argument(s): *setting* integer echo enable/disable
Remarks: This function can be used to enable/disable the echoing of received characters for serial port operation. A value of 0 for setting will disable echoing, while any non-zero number will enable echo.
Return Value: none
Example(s): ECHO 1

DISPLAY

Function: Controls display operation
Syntax: DISPLAY *setting*
Argument(s): *setting* integer display enable/disable
Remarks: This function can be used to enable/disable the display functions for those systems incorporating a front panel display. A value of 0 for setting will disable the display, while any non-zero number will enable the display. By default, the display is enabled.
Return Value: none
Example(s): DISPLAY 0

LOCKOUT

Function: Controls front panel keyboard (local mode) operation
Syntax: LOCKOUT *setting*
Argument(s): *setting* integer local front panel keyboard enable/disable
Remarks: This function can be used to enable/disable the front panel keyboard functions for those systems incorporating a local keyboard. This command is useful for serial port operation, allowing the remote user to lockout front-panel usage, similar to the GPIB REMOTE/LOCAL/LOCAL LOCKOUT functionality. When lockout is in effect, the front panel REM indicator will be illuminated, indicating to the local user that the 8210A is under remote control. The value of setting controls the function as follows:

0 -lockout disabled (local keyboard enabled)
1 -lockout enabled (local keyboard disabled)
2 -lockout enabled, but can be overridden by the user with the front panel LOCAL key

(if implemented). By default, the keyboard (local operation) is enabled.
Return Value: none
Example(s): LOCKOUT 1 turns on lockout mode, disabling local operation
LOCKOUT 0 turns off lockout, re-enabling local controls

ISKEYWORD?

Function: Checks to see if a user provided string is a reserved keyword
Syntax: ISKEYWORD? "*keyword*"
Argument(s): *keyword* string keyword to check
Remarks: This function is used to check a string to see if it is a reserved keyword. If the user-specified string is a reserved word, the query returns a ’1’, otherwise it returns a ’0’.
Return Value: *flag* integer keyword found
Example(s): ISKEYWORD? "ATTN" returns a ’1’
ISKEYWORD? "ABC" returns a ’0’

IDN

Function: Assigns system model, and serial number Syntax: IDN model serialno
Argument(s): *model* string10 system model
serialno string10 system serial number
Remarks: This function is used to set the system identification info. The assignment can be stored in non-volatile memory via the SAVE IDN command, and will be recalled during system initialization.
Return Value: none
Example(s): IDN ’8210A’ ’123’

CONFIG FORMAT HEX

Function: Sets the output format used for hexadecimal numbers.
Syntax: CONFIG FORMAT HEX *fmt*
Argument(s): *fmt* integer format type
Remarks: This function is used to set the output formatting style used for hex numbers. By default, the 8210A uses the formatting prefix specified by IEEE 488.2, which uses a prefix of ’#H’ for hex numbers. If desired, this prefix may be changed to the C language style "0X" by specifying a value of 0 for the *fmt* argument. Any other value results in the default IEEE 488.2 format.
Return Value: none
Example(s): CONFIG FORMAT HEX 0

CONFIG SERIAL EOS

Function: Sets the output End Of String character sequence for RS232 operation
Syntax: CONFIG SERIAL EOS *eoschars*
Argument(s): *eos* word end of line sequence
Remarks: This function is used to set the End Of String line-termination character(s) used during RS232 operation. By default, the 8210A uses the ASCII CR-LF sequence (0x0D, 0x0A) when sending information. The *eos* parameter can be used to specify a new terminator. The upper-byte of the *eos* word is sent first, followed by the low-byte. In either case, a value of 0 results in no character being sent.
Return Value: none
Example(s): CONFIG SERIAL EOS 0x0D0A (CR followed by LF default)
CONFIG SERIAL EOS 0x0D (CR only)
CONFIG SERIAL EOS 0x0A (LF only)
CONFIG SERIAL EOS 0x1A (^Z End Of File marker)

CONFIG CMDSET

Function: Sets the active command set
Syntax: CONFIG CMDSET *name*
Argument(s): *name* string new command set name
Remarks: This function is used to set the active command set. By default, the 8210A uses its native command set, as described in this manual. In order to switch command sets automatically, the POWERON macro can be used to change the "default" command set. Consult the factory for specific details.
Return Value: none

8-19. Device Interface Bus Control Commands

DEVICE PROTOCOL

Function: Sets the protocol for use by low-level DEVICE commands
Syntax: DEVICE PROTOCOL *prottype*
Argument(s): *prottype* string protocol type
val id protocol types include: BASE
ATTN
STEPATTN
SWITCH
Remarks: This function is used to set the protocol selection for use by the various low-level DEVICE commands. Each different device supports a number of device-dependent messages.
Return Value: none
Example(s): DEVICE PROTOCOL STEPATTN

8-20. Base Protocol Commands

DEVICE RESET

Function: Sends a Reset msg to the device
Syntax: DEVICE RESET addr
Argument(s): *Arguaddr* integer address
Remarks: This function is used to send a Reset *msg* to the *speci*
Return Value: none
Example(s): DEVICE RESET 4

DEVICE? PRESENCECHECK

Function: Sends a PresenceCheck request to a device
Syntax: DEVICE? PRESENCECHECK *addr*
Argument(s): *addr* addr integer address
Remarks: This function is used to send a PresenceCheck *msg* to the specified address. It returns a '1' if the specified device responds, otherwise the function returns '0'.
Return Value: *status* integer
Example(s): DEVICE? PRESENCECHECK 4 returns '1'

DEVICE? GETID

Function: Sends a GetID request to a device.
Syntax: DEVICE? GETID *addr*
Argument(s): *addr* integer address
Remarks: This function is used to send a GetID *msg* to the specified address.
ID structure, consisting of the following fields:

Protocol Rev char
Module Version 7 bytes
Manufacturer 8 bytes
Module Name 8 bytes
ID 32-bit integer

Example(s): DEVICE? GETID 4 returns 'B, V1.00A, Weinshel, 150T-70, 0x67000000'

DEVICE? GETCAP

Function: Sends a GetCap request to a device.
Syntax: DEVICE? GETCAP *addr*
Argument(s): addr integer address
Remarks: This function is used to send a GetCap *msg* to the specified address
Return Value: Capabilities string
Example(s): DEVICE? GETCAP 4 returns '((prot(attn) type(step) model(150T-70) attn(70.00) stepsize(10.00))'

DEVICE ENAREPORT

Function: Sends an EnableAppReport msg to a device.
Syntax: DEVICE ENAREPORT *addr* stat
Argument(s): *addr* integer address stat integer enable/disable reporting
Remarks: This function is used to send an EnaAppReport *msg* to the specified address.
Return Value: none
Example(s): DEVICE ENAREPORT 4 1

DEVICE ASSIGNADDR

Function: Sends an AssignAddr msg to a device.
Syntax: DEVICE ASSIGNADDR addr newaddr
Argument(s): *addr* integer address
newaddr integer new address
Remarks: This function is used to send an AssignAddress msg to the specified address.
Return Value: none
Example(s): DEVICE ASSIGNADDR 4 2

8-21. Step Attenuator Protocol Commands

DEVICE ATTN

Function: Sets the attenuation of a device
Syntax: DEVICE ATTN *addr atten*
Argument(s): *addr* integer address
atten unit attenuation, scaled to 0.01 (ie INT(A*100))
Remarks: This function is used to set the attenuation of a device. The atten parameter is an integer representation of the desired attenuation, scaled by a factor of 100 (ie the protocol supports a resolution of 0.01dB).
Return Value: none
Example(s): DEVICE ATTN 4 1000

DEVICE? ATTN

Function: Reads the attenuation of a device
Syntax: DEVICE? ATTN *addr*
Argument(s): addr integer address
Remarks: This function is used to read the attenuation of a device. The return value is an integer representation of the attenuation scaled by a factor of 100 (ie the protocol supports a resolution of 0.01dB).
Return Value: *atten* unit attenuation, scaled to 0.01 (ie INT(A*100))
Example(s): DEVICE? ATTN 4 returns '1000'

DEVICE PROG

Function: Sets the program word (cell bit pattern) of a device
Syntax: DEVICE PROG *addr* setting
Argument(s): addr integer address setting byte cell setting
Remarks: This function is used to program the attenuation cells with the bit pattern specified.
Return Value: none
Example(s): DEVICE PROG 4 0xAA

DEVICE? PROG

Function: Reads the program word (cell bit pattern) of a device
Syntax: DEVICE? PROG *addr*
Argument(s): *addr* integer address setting byte cell setting
Remarks: This function is used to read the attenuation cells bit pattern.
Return Value: setting byte cell setting
Example(s): DEVICE? PROG 4 returns '170'

DEVICE RELAY

Function: Sets the specified relay on/off
Syntax: DEVICE RELAY *addr relay setting*
Argument(s): *addr* integer address
relay byte relay # (1-8)
setting byte 1=on, 0=off
Remarks: This function is used to program the specified attenuator relay cell.
Return Value: none
Example(s): DEVICE RELAY 4 7 1

DEVICE? RELAY

Function: Reads the specified relay setting
Syntax: DEVICE? RELAY *addr relay*
Argument(s): *addr* integer address
relay byte relay # (1-8)
setting byte 1=on, 0=off
Remarks: This function is used to read the specified attenuator relay cell.
Return Value: setting byte 1=on, 0=off
Example(s): DEVICE? RELAY 4 7 returns '1'

DEVICE? READ CONFIG

Function: Reads the entire configuration structure of a device's internal EEPROM
Syntax: DEVICE? READ CONFIG *addr*
Argument(s): addr integer address Remarks: This function is used to read the setting of the device's configuration EEPROM.
Return Value: StepAttnConfig structure. refer to the SmartStep Programmers Reference for a discussion.
Example(s): DEVICE? READ CONFIG 4

DEVICE? READ COUNTER

Function: Reads the cycle counter for the specified relay cell

Syntax: DEVICE? READ COUNTER *addr cellno*

Argument(s):			
	addr	integer	address
	relay	byte	relay # (1-8)

Remarks: This function is used to read the setting of the device's relay switching counter, which records the total number of switching cycles the cell has performed since mfg.

Return Value:			
	setting	int32	cell switches

Example(s): DEVICE? READ COUNTER 4 1 returns '123456'

8-22. Switch Protocol Commands

DEVICE SET

Function: Sets the output of a device
Syntax: DEVICE SET *addr setting*
Argument(s): *addr* integer address setting word output setting
Remarks: This function is used set the output of a device.
Return Value: none
Example(s): DEVICE ATTN 4 255

DEVICE? SET

Function: Reads the program word of a device
Syntax: DEVICE SET *addr*
Argument(s): *addr* integer address setting word output setting
Remarks: This function is used to read the output setting of the device.
Return Value: *setting* word output setting
Example(s): DEVICE? SET 4 returns ’170’

DEVICE SETMASK

Function: Sets the output of a device using a mask value
Syntax: DEVICE SETMASK *addr setting mask*
Argument(s): *addr* integer address
setting word output setting
mask word output mask
Remarks: This function is used set the output of a device, using a mask value. Only those outputs with a mask value of ’1’ will be effected.
Return Value: none
Example(s): DEVICE SETMASK 4 7 0x0F

DEVICE RELAY

Function: Sets the specified output relay on/off
Syntax: DEVICE RELAY *addr relay setting*
Argument(s): *addr* integer address
relay byte relay # (1-8)
setting byte 1=on, 0=off
Remarks: This function is used to program the specified relay.
Return Value: none
Example(s): DEVICE RELAY 4 7 1

DEVICE? RELAY

Function: Reads the specified relay setting
Syntax: DEVICE? RELAY *addr relay*
Argument(s): *addr* integer address
relay byte relay # (1-8)
setting byte 1=on, 0=off
Remarks: This function is used to read the specified relay setting.
Return Value: *setting* byte 1=on, 0=off
Example(s): DEVICE? RELAY 4 7 returns ’1’

DEVICE RELAY CONG

Function: Reads the entire configuration structure of a device’s internal EEPROM **Syntax:** DEVICE? READ CONFIG *addr*
Argument(s): *addr* integer address
Remarks: This function is used to read the setting of the device’s configuration EEPROM.
Return Value: SwitchConfig structure. refer to the SmartStep Programmers Reference for a discussion.
Example(s): DEVICE? READ CONFIG 4

9. Programming and Configuration Examples

Example 1: Single Attenuator

If there is only one attenuator connected to the 8210A, then the assignment of a device name is not required, and operation couldn't be simpler. You can just send attenuation commands and queries, ignoring the device name parameter.

ATTN 53 ; sets the attenuator to 53 dB
ATTN? ; returns '53.00'

Example 2: Multiple Attenuators

In this example, we will use two attenuators. Each of the attenuators is a Model 3200T-1 (127dB/1dB steps). We will use the names 'AT1' and 'AT2' to distinguish between the two devices. Assume that the attenuators are serial numbers 101 and 102, respectively.

a. Assign names to the two attenuators.

Send: ASSIGN AT1 '3200T-1' 101
ASSIGN AT2 '3200T-1' 102

b. Save these names in the non-volatile EEPROM memory.

Send: SAVE ASSIGN

c. Optionally, set the number of devices to expect during configuration, and save it. This allows the 8210A to report a configuration error if the device count doesn't match that expected.

Send: CONFIG DEVICE COUNT 2
SAVE CONFIG

d. Rerun the device assignment to associate the newly defined names with the attenuators.

Send: REASSIGN

The channels may now be programmed using the following commands as examples:

ATTN AT1 53 ; sets the 1st attenuator (serial number 101) to 53 dB
ATTN AT2 32.00 ; sets the 2nd attenuator (serial number 102) to 32dB

Steps a) thru d) do not need to be repeated unless there is a change in the physical system configuration (ie replacing an attenuator with a different model or serial number). The names will be automatically assigned during the power-on configuration process.

Example 3: Virtual Attenuator

In this example, we will use two attenuators to create a virtual attenuator. We will use a Model 150T-70 (70dB/10dB steps) serial number 101, and a Model 150T-11 (11dB/1dB steps) serial number 102, to create a virtual attenuator with an 81dB (70+11) range, in 1dB steps. We will use the name 'AT1' for the 150T-70, 'AT2' for the 150T-11, and we will name the resulting virtual attenuator 'CHAN1'.

a. Assign names to the two attenuators.

```
Send:  ASSIGN  AT1 '150T-70' 101
       ASSIGN  AT2 '150T-11' 102
```

b. Assign a name to the virtual attenuator

```
Send:  ASSIGN  ATTN  CHAN1  AT1 AT2
```

c. Save these names in the non-volatile EEPROM memory.

```
Send:  SAVE ASSIGN
       SAVE ASSIGN  ATTN
```

d. Rerun the device assignment to associate the newly defined names with the attenuators.

```
Send:  REASSIGN
```

To see the effect of the virtual attenuator, query the attenuator's capability

```
Send:  ATTN?  GETCAP  CHAN1
       Rcv: 81.00, 1.00
```

This indicates that attenuator CHAN1 has an 81 dB range, with a stepsize of 1 dB
The channels may now be programmed using the following commands as examples:

```
ATTN  AT1  70 ; sets the 1st attenuator (serial number 101) to 70 dB
ATTN  AT2  5 ; sets the 2nd attenuator (serial number 102) to 5dB
ATTN CHAN1 65 ; sets the virtual attenuator to 65 dB (AT1=60dB, AT2=5dB)
ATTN?   CHAN1 ; returns '65.00'
```

As in Example 2, steps a) thru d) do not need to be repeated unless there is a change in the physical system configuration (ie replacing an attenuator with a different model or serial number). The names will be automatically assigned during the power-on configuration process.

Example 4: Attenuator Groups

In this example, we will use four attenuators to create an attenuator group. We will use the following devices:

Attenuator #1: Model 3200T-1, serial number 101
Attenuator #2: Model 3200T-1, serial number 102
Attenuator #3: Model 3200T-1, serial number 103
Attenuator #4: Model 3200T-1, serial number 104

We will use the names 'AT1' thru 'AT4' for these attenuators, and we will name the resulting group 'GROUP1'

a. Assign names to the four attenuators.

Send: ASSIGN AT1 '3200T-1' 101
ASSIGN AT2 '3200T-1' 102
ASSIGN AT3 '3200T-1' 103
ASSIGN AT4 '3200T-1' 104

b. Assign a name to the group

Send: GROUP GROUP1 AT1 AT2 AT3 AT4

c. Save these names in the non-volatile EEPROM memory.

Send: SAVE ASSIGN
SAVE GROUP

d. Rerun the device assignment to associate the newly defined names with the attenuators.

Send: REASSIGN

The channels may now be programmed using the following commands as examples:

ATTN AT1 70 ; sets the 1st attenuator (serial number 101) to 70 dB
ATTN AT2 5 ; sets the 2nd attenuator (serial number 102) to 5 dB
ATTN GROUP1 32 ; sets each of the four attenuators (AT1-AT4) to 32 dB
INCR GROUP1 ; increments the attenuation setting for each attenuator on the group (32+1=33dB)
ATTN? AT1 ; returns '33.00'
STEPSIZE GROUP1 5 ; sets the increment size to 5 dB
DECR GROUP1 ; decrements the attenuation setting for each attenuator on the group (33-5=28dB)
ATTN? AT1 ; returns '28.00'

As before, steps a) thru d) do not need to be repeated unless there is a change in the physical system configuration. The names will be automatically assigned during the power-on configuration process.

Example 5: Multiple Virtual Attenuators with Groups

In this example, we will use eight attenuators to create four virtual attenuators, and then assign these to two different groups. The virtual attenuators will each be comprised of a Model 3200T-1 (127dB/1dB steps) and a Model 3201T-4 (1.2dB/0.1dB steps) to create a virtual 128.2dB/0.1dB step attenuator

Attenuator #1: Model 3200T-1, serial number 101
Attenuator #2: Model 3200T-1, serial number 102
Attenuator #3: Model 3200T-1, serial number 103
Attenuator #4: Model 3200T-1, serial number 104
Attenuator #5: Model 3201T-4, serial number 201
Attenuator #6: Model 3201T-4, serial number 202
Attenuator #7: Model 3201T-4, serial number 203
Attenuator #8: Model 3201T-4, serial number 204

We will use the names ’AT1’ thru ’AT8’ for these attenuators, ’CH1’ thru ’CH4’ for the four virtuals, and we will name the two groups ’G1’ and ’G2’.

a. Assign names to the eight attenuators.

Send:
```
ASSIGN  AT1 ’3200T-1’ 101
ASSIGN  AT2 ’3200T-1’ 102
ASSIGN  AT3 ’3200T-1’ 103
ASSIGN  AT4 ’3200T-1’ 104
ASSIGN  AT5 ’3201T-4’ 201
ASSIGN  AT6 ’3201T-4’ 202
ASSIGN  AT7 ’3201T-4’ 203
ASSIGN  AT8 ’3201T-4’ 204
```

b. Assign the four virtual names.

Send:
```
ASSIGN  ATTN  CH1  AT1 AT5 ; combine AT1 and AT5
ASSIGN  ATTN  CH2  AT2 AT6
ASSIGN  ATTN  CH3  AT3 AT7
ASSIGN  ATTN  CH4  AT4 AT8
```

c. Assign the two group names

Send:
```
GROUP  G1 CH1  CH2 ; group 1 is AT1, AT5, AT2, and AT6
GROUP  G2 CH3  CH4 ; group 2 is AT3, AT7, AT4, and AT8
```

d. Save these names in the non-volatile EEPROM memory.

Send:
```
SAVE ASSIGN
SAVE ASSIGN  ATTN
SAVE GROUP
```

e. Rerun the device assignment to associate the newly defined names with the attenuators.

Send: REASSIGN

The channels may now be programmed using the following commands as examples:

ATTN AT1 70 ; sets the 1st attenuator (serial number 101) to 70 dB
ATTN CH1 5.2 ; sets the virtual attenuator CH1 to 5.2 dB (AT1=5 dB, AT5=0.2 dB)
ATTN G1 32.1 ; sets each of the virtual attenuators (CH1 and CH2) in group G1 to 32.1 dB
ATTN G2 20 ; sets each of the virtual attenuators (CH3 and CH4) in group G2 to 20 dB
REF G2 ; sets the reference value for group G2 to current setting (20 dB)
RELATTN G2 -5.00 ; sets the relative attenuation for group G2 to 5 dB below reference value (15 dB)

Example 6: Single SPDT Switch

This example shows using the Relay Output Card (Model 193-8015) to control a SPDT RF switch (failsafe type). Typically, a SPDT switch requires 1 control line to set the state of the switch, and the switch has two states: 0 (off, or NC), and 1 (on, or NO). We will use Relay Output 1 from the Relay Card to control the switch. The serial number of the Relay Output Card is serial number 110 . We will assign the name 'RLYBD' to the Relay Card.

a. Assign a name to the Relay Output Card

   Send: ASSIGN RLYBD '193-8015' 110

b. Save these names in the non-volatile EEPROM memory.

   Send: SAVE ASSIGN

c. Rerun the device assignment to associate the newly defined name with the relay card

   Send: REASSIGN

   The SPDT switch may now be programmed using the following commands as examples:

   SWITCH RLYBD 1 ; turns on the SPDT switch (NO)
   SWITCH RLYBD 0 ; turns off the SPDT switch (NC)

Example 7: Multiple SPDT Switches (Virtual Switch)

This example shows using the Relay Output Card (Model 193-8015) to control 3 SPDT RF switches (failsafe type). Typically, a SPDT switch requires 1 control line to set the state of the switch, and the switch has two states: 0 (off, or NC), and 1 (on, or NO). The serial number of the Relay Output Card (PN 193-8015) is serial number 110 . We will assign the name 'RLYBD' to the Relay Card. We will use three outputs from the Relay Card (Relay Outputs 1-3) to control the switches, which we will name 'SW1' thru 'SW3', respectively. Virtual switches will be used so that programming an individual switch will not effect the setting of the other switches.

a. Assign a name to the Relay Output Card

   Send: ASSIGN RLYBD '193-8015' 110

b. Create the virtual switch for the first RF switch, SW1. This switch is controlled by Output 1of the Relay Card. The mask value for Output 1 (bit 0) is 0000 0001 binary (0x01)

   Send: ASSIGN SWITCH SW1 RLYBD 0x01

c. Create the virtual switch for the RF switch SW2. This switch is controlled by Output 2 of the Relay Card. The mask value for Output 2 (bit 1) is 0000 0010 binary (0x02)

   Send: ASSIGN SWITCH SW2 RLYBD 0x02

d. Create the virtual switch for the RF switch SW3. This switch is controlled by Output 3 of the Relay Card. The mask value for Output 3 (bit 2) is 0000 0100 binary (0x04)

   Send: ASSIGN SWITCH SW3 RLYBD 0x04

e. Save these names in the non-volatile EEPROM memory.

   Send: SAVE ASSIGN
   SAVE ASSIGN SWITCH

f. Rerun the device assignment to associate the newly defined names with the relay card and the virtual switches

   Send: REASSIGN

   The switches may now be programmed using the following commands as examples:

   SWITCH SW1 1 ; turns on SW1 (NO)
   SWITCH SW2 1 ; turns on SW2
   SWITCH SW3 0 ; turns off SW3

Example 8: Multiple SP4T Switches (Virtual Switch)

This example shows using the Relay Output Card (Model 193-8015) to control two SP4T RF switches (failsafe type). Typically, a SP4T switch requires 4 control lines to set the state of the switch, and the switch has 5 states: 0 (all off), and position 1 thru position 4. The switch operates in a "one-of-N" manner, in that only one control line is used at a time. This is referred to as DECODED mode The serial number of the Relay Output Card is serial number 110 . We will assign the name 'RLYBD' to the Relay Card. We will use four outputs from the Relay Card (Relay Outputs 1-4) to control the first switch, which we will name SW1, and Relay Outputs 5-8 to control the second switch, which we will name SW2. Virtual switches will be used so that programming an individual switch will not effect the setting of the other switches.

a. Assign a name to the Relay Output Card

   Send: ASSIGN RLYBD '193-8015' 110

b. Create the virtual switch for the first RF switch, SW1. This switch is controlled by Outputs 1-4 of the Relay Card. The mask value for Outputs 1-4 (bits 0,1,2,3) is 0000 1111 binary (0x0f). Specify decode mode operation so that only one output asserts at a time.

   Send: ASSIGN SWITCH SW1 RLYBD 0x0f DECODE

c. Create the virtual switch for the RF switch SW2. This switch is controlled by Outputs 2-8 of the Relay Card. The mask value for Outputs 2-8 (bits 4,5,6,7) is 1111 0000 binary (0xf0). Specify decode mode operation so that only one output asserts at a time.

   Send: ASSIGN SWITCH SW2 RLYBD 0xf0 DECODE

d. Save these names in the non-volatile EEPROM memory.

   Send: SAVE ASSIGN
   SAVE ASSIGN SWITCH

e. Rerun the device assignment to associate the newly defined names with the relay card and the virtual switches

   Send: REASSIGN

   The switches may now be programmed using the following commands as examples:

```
SWITCH  SW1 0  ; sets SW1 off
SWITCH  SW1 1  ; sets SW1 to position 1
SWITCH  SW1 4  ; sets SW1 to position 4
SWITCH  SW2 2  ; sets SW2 to position 2
```

   You could directly program the outputs of the Relay Card to control the switches, but you would have to insure that you keep track of the states of all outputs. For example,

```
SWITCH  RLYBD 0 ; sets SW1 off, SW2 off
SWITCH  RLYBD 1 ; sets SW1 position 1, SW2 off
SWITCH  RLYBD 2 ; sets SW1 position 2, SW2 off
SWITCH  RLYBD 16 ; sets SW1 off, SW2 position 1
SWITCH  RLYBD 20 ; sets SW1 position 3, SW2 position 1
```

   Clearly, using the virtual switches are much easier.

Example 9: Using macros to simplify programming multiple RF Switches

This example shows how using macros can simplify the programming of large switching matrices. In order to simplify the example, we will only use 3 SPDT switches. Assume that the switches are arranged in a tree fashion, with the two outputs of SW1 connected to the inputs of SW2 and SW3, respectively, creating 4 output paths from switches SW2 and SW3. The example assumes that names for the Relay Output Card, and each of the three SPDT switches have already been set (see Example 7).

In order to select one of the four outputs, each of the three switches must be set to the appropriate setting, as shown below:

Output	SW1	SW2	SW3
1	0	0	0
2	0	1	0
3	1	0	0
4	1	0	1

To select an output, you could send the individual programming commands to each of the switches, for example to select output 4 you would send "SWITCH SW1 1; SWITCH SW2 0; SWITCH SW3 1". An easier solution would be to assign a macro to each of the desired output positions, and then by sending the appropriate macro name, each of the three switches would be set to the proper value.

a. Create macros for each of the 4 output positions, using the names PATH1 - PATH4, respectively.

Send: MACRO "PATH1" "SWITCH SW1 0; SWITCH SW2 0; SWITCH SW3 0"
MACRO "PATH2" "SWITCH SW1 0; SWITCH SW2 1; SWITCH SW3 0"
MACRO "PATH3" "SWITCH SW1 1; SWITCH SW2 0; SWITCH SW3 0"
MACRO "PATH4" "SWITCH SW1 1; SWITCH SW2 0; SWITCH SW3 1"

b. Save the macros in the non-volatile EEPROM memory.

Send: SAVE MACRO

The switches may now be programmed using the following commands as examples: PATH1
PATH3

10. Maintenance:

The Model 8210A SmartStep Interface requires no scheduled or preventive maintenance other than the normal handling and cleaning procedures. If cleaning is necessary, use currents of compressed air and a lint-free tissue. Where more drastic measures are required, use tissue that is moistened (not saturated) with methanol. When such cleaning precautions are observed regularly, connectors can maintain their stability for several thousand connection cycles.

11. Applications:

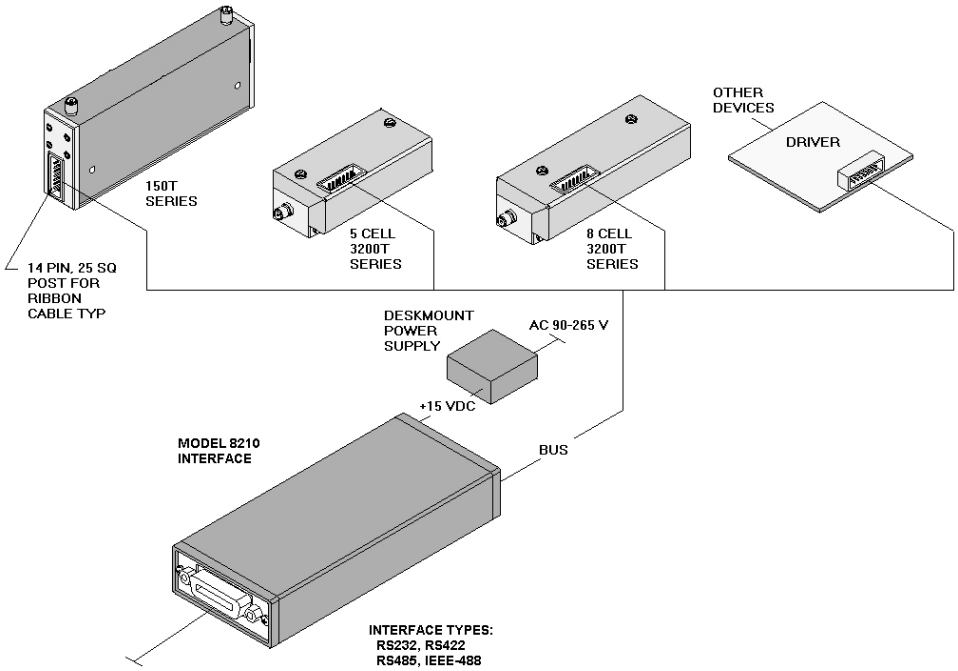

Applications for the 8210A range from providing control of a single SmartStep Attenuator in a bench test/lab environment using a PC and a terminal emulator, to complex system applications where the 8210A is employed to control many devices to create custom/semi-custom subsystems to reduce overall design cost. Weinschel can provide a variety of custom designed driver interfaces for various devices, such as RF switches, relays, PIN attenuators, displays and other devices, as well as complete subsystem design and integration services. Contact us with your specialized needs.

12. Accessories:

Part Number	Description
001-378	Deskmount Power Supply, +1 V 95-250 Vac, 47-63 Hz ac input
193-8013	Interconnect Cable
193-8012	Attenuator Mounting Kit: This kit includes all hardware to allow the user to mount one SmartStep Attenuator onto the Model 8210A.

13. Contacting Aeroflex / Weinschel:

In the event of a malfunction, contact Aeroflex / Weinschel. An apparent malfunction of an instrument or component may be diagnosed over the phone by first contacting the Customer Service Department at Aeroflex / Weinschel. DO NOT send the instrument or component back to the factory without prior authorization. When it is necessary to return an item, state the symptoms, catalog and type number of the instrument or component, and date of original purchase. Also write the Company name and your name and phone number on a card and tape the card to the item returned. Page provides further information regarding preparation of a unit for reshipment. Contact Aeroflex / Weinschel Customer Service Department as follows:

Via mail:	Aeroflex / Weinschel, Inc. 5305 Spectrum Drive Frederick, MD 21703-7362 U.S.A.
Via Telefax:	301-846-9116
Via Phone:	Call TOLL FREE 800-638-2048 Toll call # 301-846-9222
Via Website:	www.weinschel.com
Via e-mail:	sales@weinschel.com

14. Aeroflex / Weinschel Warranty:

PRODUCTS – Aeroflex / Weinschel, Inc. warrants each product it manufactures to be free from defects in material and workmanship under normal use and service anywhere in the world. Aeroflex / Weinschel, Inc.'s only obligation under this Warranty is to repair or replace, at its plant, any product or part thereof that is returned with transportation charges prepaid to Aeroflex / Weinschel, Inc. by the original purchaser within ONE YEAR from the date of shipment.

The foregoing Warranty does not apply Aeroflex / Weinschel, Inc.'s sole opinion to products that have been subject to improper or inadequate maintenance, unauthorized modifications, misuse, or operation outside the environmental specifications for the product.

SOFTWARE PRODUCTS- Aeroflex / Weinschel, Inc. software products are supplied without representation or Warranty of any kind. Aeroflex / Weinschel, Inc., therefore, assumes no responsibility and will not accept liability (consequential or otherwise) arising from the use of program materials, disk, or tape.

The Warranty period is controlled by the Warranty document furnished with each product and begins on the date of shipment. All Warranty returns must be authorized by Aeroflex / Weinschel, Inc. prior to their return.

Aeroflex / Weinschel, Inc.'s Quality System Certified to:

CERTIFIED
ISO 9001

Accredited by the Council for Accreditation (RvA)

INTERTEK CERTIFICATION

ANSI-RAB QMS ACCREDITED

National Accreditation Program

Certificate No. 94-289D

© 1999, 2001, 2003 Aeroflex / Weinschel, Inc.

APPENDIX A - RESERVED KEYWORDS

*CLS
*ESE
*ESE?
*ESR?
*IDN?
*OPC
*OPC?
*RST
*SRE
*SRE?
*STB?
*TST?
*WAI
ADDR
APPTEST
ASSIGN (abbr ASN)
ATTN
BASE
BUILD
BUFFER
CHANNEL (abbr CHAN)
CELL
CMDSET
COMM
CONFIG (abbr CFG)
COUNT (abbr CNT)
COUNTER
COUNTERS
CYCLERATE
DCSTARTUP
DECODE
DEFAULT
DELETE
DEVICE (abbr DEV)
DRIVER
ECHO
EEPROM
EMC
ENAREPORT
ENCODE
EOS
ERASE
DECR
DISPLAY
FORMAT
GETCAP
GETID
GPIB
GROUP
HEX
IDN
IDWAIT
IN
INCR
INPORT?
IOMODE
ISPRESENT?
ISKEYWORD?
LED
LIST?
LOCKOUT
MACRO
MASK
MAX
MEM
MODE
NAME
OPTION
OUT
OUTPORT
POS
PRESENCECHECK (abbr PRESCHK}
PROG
PROTOCOL
PWRONSETTING
READ
REASSIGN
REBOOT
RECALL
RECONFIG
REF
RELATTN
RELAY
RELAYCNT
RESET
SAVE
SERIAL
SERIALNO
SET
SETMASK
SIMSW
STEPATTN
STEPSIZE
SWDEBOUNCE
SWITCH (abbr SW)
SWSPEED
SYSTEM
TIMEOUT
TYPE
VALUE

APPENDIX B - 488.2 Required Documentation

Number	Required Item	Implementation
1	Interface Function Subsets Implemented	SH1, AH1, T6, L4, SR1, RL1, PP0, DC1, DT0, C0
2	Device behavior when the address is set outside of the 0-30 range	The 8210A address is set to 10
3	When is a user address changed recognized?	When the DIP switch setting is changed
4	Description of settings at power-on	User programmable via macro
5	Message exchange options a. Size and behavior of input buffer b. Queries that return more than one <RESPONSE MESSAGE UNIT> c. Queries that generate a response when parsed d. Queries that generate a response when read e. Commands that are coupled	a. The GPIB input buffer is 2048 bytes in length. When the Input Buffer becomes full it processes the messages currently received before accepting additional messages. All data bytes received will be stored in the Input Buffer until 'end of message' is detected. The message(s) received are the processed in the order received. b. The 8210A contains no Query commands that return more than one <RESPONSE MESSAGE UNIT> c. All valid queries generate a response when parsed. The reply is generated at the time the Query message is received. d. none e. none
6	Functional elements used in construction of device specific commands	<PROGRAM MESSAGE> <PROGRAM MESSAGE TERMINATOR> <PROGRAM MESSAGE UNIT> <PROGRAM MESSAGE UNIT SEPARATOR> <COMMAND MESSAGE UNIT> <QUERY MESSAGE UNIT> <COMMAND PROGRAM HEADER> <QUERY PROGRAM HEADER> <PROGRAM HEADER SEPARATOR> <PROGRAM DATA SEPARATOR> <PROGRAM DATA> <DECIMAL NUMERIC PROGRAM DATA> <CHARACTER PROGRAM DATA>
7	Buffer size limitations for block data	not implemented
8	<PROGRAM DATA> elements that may appear within an expression	none
9	Response syntax for queries	see command table
10	Description of device to device message transfer traffic that does not follow the rules for <RESPONSE MESSAGES>	none
11	Size of block data responses	none
12	Common commands and queries that are implemented	*IDN?, *RST, *OPC, *OPC?, *CLS, *SRE, *SRE?, *ESE, *ESE?, *STB, *TST?, *WAI
13	State of the 8210A following completion of the CAL? Query	not implemented
14	Max length of the trigger macro block	not implemented
15	Macro parameters	not implemented (device specific forms used)
16	Response to *IDN?	<Weinschel, 8210A, Serial Number, Software Revision> Manufacturer string length = 16 chars max Model Number string length = 8 chars max Serial number string length = 16 chars max Software Revision string length = 8 chars max
17	*DDT implementation	not implemented
18	Size of *RDT/*RDT? resources	not implemented
19	States affected by *RST, *LRN, *RCL, and *SAV	*RST resets the Parser, Input Buffer, and Output Queue. *LRN, *RCL, and *SAV are not implemented
20	Scope of the self test performed by the *TST?	a. checks non-volatile memory contents b. checks Device Interface Bus c. checks front-panel interface
21	Additional status data structures used in status reporting	none
22	Commands overlapped/sequential	All commands are sequential
23	Functional criteria met with an operation complete message is generated in response to that command	Command is finish executing
24	Descriptions used for infinity and Not-A-Number (NAN)	N/A